entropy

IMPACT FACTOR 2.1

Indexed in: PubMed

CITESCORE 4.9

Article

Hierarchical Controlled Joint Remote Implementation of the Partially Unknown Operations of m Qudits via m High-Dimensional Entangled States

Ruiheng Jing, Qi Lan and Ping Zhou

Special Issue

Quantum Entanglement—Second Edition

Edited by

Prof. Dr. Leong Chuan Kwek and Prof. Dr. Marco Genovese

MDPI

https://doi.org/10.3390/e26100857

entropy

MDPI

Article

Hierarchical Controlled Joint Remote Implementation of the Partially Unknown Operations of m Qudits via m High-Dimensional Entangled States

Ruiheng Jing [1,2], Qi Lan [1,2] and Ping Zhou [1,2,3,*]

1 College of Mathematics and Physics, Guangxi Minzu University, Nanning 530006, China; bnuerr@tom.com (R.J.); pinggogo@tom.com (Q.L.)
2 Key Lab of Quantum Information and Quantum Optics, Guangxi University for Nationalities, Nanning 530006, China
3 Guangxi Key Laboratory of Hybrid Computational and IC Design Analysis, Nanning 530006, China
* Correspondence: zhouping@gxmzu.edu.cn; Tel.: +86-771-326-0370

Abstract: We present a protocol for the hierarchical controlled joint remote implementation of the partially unknown operations of m qudits belonging to some restricted sets by using m multiparticle high-dimensional entangled states as the quantum channel. All the senders share the information of the partially unknown operations and cooperate with each other to implement the partially unknown operations on the remote receiver's quantum system. The receivers are hierarchized in accordance with their abilities to reconstruct the desired state. The agents in the upper grade need only cooperate with one of the lower-grade agents, and the agents in the lower grade need the cooperation of all the other agents. The protocol has the advantage of having high channel capacity by using a high-dimensional entangle state as the quantum channel for the hierarchial controlled joint remote implementation of partially unknown quantum operations of m qudits.

Keywords: hierarchial joint remote implementation of quantum operation; partially unknown operation; high-dimensional quantum system

check for updates

Citation: Jing, R.; Lan, Q.; Zhou, P. Hierarchical Controlled Joint Remote Implementation of the Partially Unknown Operations of m Qudits via m High-Dimensional Entangled States. *Entropy* **2024**, *26*, 857. https://doi.org/10.3390/e26100857

Academic Editors: Leong Chuan Kwek and Marco Genovese

Received: 23 August 2024
Revised: 3 October 2024
Accepted: 8 October 2024
Published: 10 October 2024

Copyright: © 2024 by the authors. Licensee MDPI, Basel, Switzerland. This article is an open access article distributed under the terms and conditions of the Creative Commons Attribution (CC BY) license (https://creativecommons.org/licenses/by/4.0/).

1. Introduction

The utilization of the principle of quantum mechanics in information processing provides some novel methods for quantum information processing, such as quantum key distribution [1–9], quantum secure direction communication [10–20], quantum teleportation [21–28], quantum remote state preparation [29,30], quantum computation [31–40], quantum nonlocal gate [41–46] and quantum operation remote implementation [47–49].

Recently, the remote implementation of quantum operation has garnered much interest since it was first proposed by Huelga et al. [47]. Theoretical protocols for the remote implementation of quantum operations, especially partially unknown quantum operations, have been proposed via different quantum channels [48–61]. The operations are partially unknown, since the values of their matrix elements are unknown but the positions of the nonzero matrix elements are known. Huelga et al. showed that single-qubit operations can be remote implemented via a quantum entangled channel shared in advance, and classical communication and partially unknown operations of one qubit belonging to two restricted sets

$$U_{com} = \begin{pmatrix} e^{i\varphi} & 0 \\ 0 & e^{-i\varphi} \end{pmatrix}, U_{anti} = \begin{pmatrix} 0 & e^{i\varphi} \\ -e^{-i\varphi} & 0 \end{pmatrix} \quad (1)$$

can be remote implemented via less resources [48]. In 2006, Wang investigated the extension of the remote implementation of partially unknown operations to the case of multiqubit. The partially unknown operations of N qubits as suggested by Wang have only one nonzero element in every row or every column of their representation matrices.

Since the nonzero element in the first row has 2^N possible positions, the nonzero element in the second row has $2^N - 1$ possible positions and the nonzero element in the 2^Nth row has one possible position, the partial operations of N qubits belong to $2^N!$ restricted sets [49]. Moreover, Wang presented a scheme for combining the remote implementation of $U = U_1U_2$. U_1, U_2 are partially unknown operations belonging to the restricted sets [50]. In 2008, Fan and Liu presented a protocol for the multiparty controlled remote implementation of partially unknown operations [51]. Qiu and Wang presented a scheme to implement the partially unknown operations of two qubits belonging to 24 restricted sets via Cavity QED [52]. In 2010, Chen showed that quantum operations belonging to restrict set can be divided into m pieces and simultaneously remotely implemented on m remote receivers' quantum system [53]. In 2011, Chen et al. presented a protocol for the probabilistic remote implementation of a partially unknown operation via nonmaximally entangled state [54]. Situ and Qiu considered the remote implementation of partially unknown operations of multiqubit without prior sharing of entanglement [55]. In 2013, Zhan et al. presented a protocol for the remote implementation of partially unknown operations

$$U_0 = \begin{pmatrix} u_0 & 0 & 0 \\ 0 & u_1 & 0 \\ 0 & 0 & u_2 \end{pmatrix}, U_1 = \begin{pmatrix} 0 & 0 & u_0 \\ u_1 & 0 & 0 \\ 0 & u_2 & 0 \end{pmatrix}, U_2 = \begin{pmatrix} 0 & u_0 & 0 \\ 0 & 0 & u_1 \\ u_2 & 0 & 0 \end{pmatrix} \tag{2}$$

belonging to three restricted sets in a three-dimensional quantum system [56]. In 2019, Peng et al. put forward a protocol for quantum rotation operation sharing with a five-qubit cluster state [57]. In 2022, An and Cao presented a method for the parallel remote implementation of partially unknown operations of one qubit in polarization and spatial-mode degrees of freedom with a hyperentangled state [58]. In 2023, Peng et al. presented a scheme for the remote implementation of m partially unknown operations of one qubit on the remote receivers' quantum systems under the controller's control [59]. In 2024, Liu et al. proposed a protocol for the bidirectional controlled remote implementation of a partially unknown operation of two qubits belonging to eight restricted sets via a nine-qubit entangled state $\frac{1}{\sqrt{2}}[|\varphi^+\rangle|\varphi^+\rangle|\varphi^+\rangle|\varphi^+\rangle|0\rangle + |\varphi^-\rangle|\varphi^-\rangle|\varphi^-\rangle|\varphi^-\rangle|1\rangle]$, where $|\varphi^\pm\rangle = \frac{1}{\sqrt{2}}(|00\rangle \pm |11\rangle)$ [60]. Shi et al. presented a protocol for the hierarchical joint remote implementation of a partially unknown quantum operation of one qubit with a cluster state, where the receivers are hierarchized according to their abilities to accomplish the remote implementation of the partially unknown operations [61]. The remote implementation of the partially unknown operation of one qubit has been experimental demonstrated via linear optical elements [62].

In the past few years, researchers have expressed much interest in quantum information processing via high-dimensional quantum system, as a high-dimensional quantum system has a high capacity for the storing and processing of quantum information in long-distance quantum communication. Moreover, it offers a alternate method for scaling up the quantum computation. In 2000, Muthukrishnan and Stroud showed that an arbitrary n-qudit operation can be decomposed into single- and two-qudit operations [63]. In 2001, Bennett investigated the method for the remote preparation of an arbitrary qudit state [64]. In 2002, Vlasov showed that two single-qudit noncommutative operations and two-qudit operations can construct a universal qudit operation [65]. In 2003, Zhou et al. presented the concept of a qudit cluster state and proposed one-way computation based on the qudit cluster state [66]. In 2005, Wang et al. presented a protocol for quantum secure direct communication via high-dimensional quantum state [67]. In 2007, Li et al. put forward a method for the controlled teleportation of an arbitrary m-qudit state with d-dimensional Greenberger–Horne–Zeilinger(GHZ) states [68]. In 2014, Luo and Wang proposed a protocol for the implementation of universal quantum computation on the high-dimensional quantum system via a set of one-qudit and two-qudit operations [69]. Krenn et al. proposed the creation of a (100×100)-dimensional entangled state via spatial modes of photons [70]. In 2017, Kues et al. demonstrated the generation of a high-dimensional frequency entangled state [71]. Bouchard et al. realized optimal cloning for a high-dimensional state of photons in their orbital angular momentum degrees of freedom [72]. In 2018, Hu et al. reported

the experimental demonstration of quantum superdense coding with a four-dimensional path-polarization entangled state $|\psi\rangle = \frac{1}{2}(|00\rangle + |11\rangle + |22\rangle + |33\rangle)$ [73]. In 2019, Reimer et al. demonstrated high-dimensional one-way quantum computation via qudit cluster state [74]. In 2020, Vagniluca et al. realized four-dimensional quantum key distribution via high-dimensional quantum state encoded in time-bin degrees of freedom [75]. Hu et al. experimentally realized the efficient generation [76] and distribution [77] of a high-dimensional entangled state and demonstrated high-dimensional quantum teleportation via the high-dimensional entangled state [78]. Wang et al. investigated the control effectiveness of high-dimensional controlled teleportation [79]. Kiktenko et al. showed the significant reduction of quantum operations for the implementation of a Toffoli gate via a high-dimensional quantum state [80]. In 2022, Saha et al. presented a novel method to decompose an n-qudit Toffoli gate into two-qudit gates without an auxiliary qudit [81]. Nikolaeva proposed a scheme to decompose an n-qubit Toffoli gate via 2n-3 two-qutrit gates [82]. Chen et al. presented a scheme for the perfect teleportation of a sing-qubit state with a high-dimensional partially entangled state $|\Phi\rangle = a_0|00\rangle + a_1|11\rangle + a_2|22\rangle$ [83]. In 2023, Hrmo et al. experimentally realized a two-qudit entangling gate via a trapped-ion system [84]. Luo et al. experimentally demonstrated a two-qutrit gate via superconducting quantum circuits [85]. Xing proposed a method for preparing a multiparticle high-dimensional GHZ state via optical system [86]. In 2024, Lv et al. experimentally demonstrated high-dimensional controlled teleportation via a three-dimensional GHZ state $|\phi\rangle = \frac{1}{\sqrt{2}}(|000\rangle + |111\rangle + |222\rangle)$ [87]. Xu et al. experimentally demonstrated quantum state compression from two qubits $\alpha|0\rangle + \beta|1\rangle$ to a qutrit $\alpha^2|0\rangle + \sqrt{2}\alpha\beta|1\rangle + \beta^2|2\rangle$ [88].

Although there are some protocols for the remote implementation of partially unknown operations belonging to restricted sets in a high-dimensional quantum system, the hierarchical joint remote implementation of partially unknown operations of m qudits in high-dimensional quantum system is not seriously considered [55,56]. We present a protocol for the hierarchical joint remote implementation of partially unknown operations of m qudits belonging to restricted sets via m multiparticle high-dimensional entangled states. All the senders share the information of the partially unknown operations and cooperate with each other to jointly remotely implement the partially unknown operations in high-dimensional system. The receivers are hierarchized in accordance with their abilities to complement the partially unknown operations remote implementation. The upper-grade agents only need the cooperation of one of the other agents to complete the remote implementation of the partially unknown operations and the lower-grade agents need the cooperation of all the other agents. The protocol has the advantage of having a high channel capacity by remote implementing partially unknown operations of m qudits via m multiparticle high-dimensional entangled states.

2. Hierarchial Joint Remote Implementation of Partially Unknown Operations of One Qudit via a Multiparticle High-Dimensional Entangled State

To present the principle of our protocol clearly, we first present the protocol for the hierarchical joint remote implementation of partially unknown operations of one qudit belonging to restricted sets in d-dimensional quantum system, then generalize it to the case of remote implementation of partially unknown operations of m qudits.

Similar to the two-dimensional system, $|0\rangle, \cdots, |d-1\rangle$ is the eigenbasis of the pauli operator Z_d [68,89]. $|0\rangle_x, \cdots, |d-1\rangle_x$ is the eigenbasis of the pauli operator X_d.

$$|j\rangle_x = \frac{1}{\sqrt{d}}(|0\rangle + e^{\frac{2\pi i}{d}j}|1\rangle + \cdots + e^{\frac{2\pi i}{d}j(d-1)}|d-1\rangle), \tag{3}$$

where $j = 0, 1, \cdots, d-1$. Similar to Ref. [89], the quantum Fourier transformation

$$H_d = \frac{1}{\sqrt{d}} \begin{pmatrix} 1 & 1 & \cdots & 1 \\ 1 & e^{\frac{2\pi i}{d}1\cdot 1} & \cdots & e^{\frac{2\pi i}{d}1\cdot(d-1)} \\ \cdots & & & \cdots \\ 1 & e^{\frac{2\pi i}{d}(d-1)\cdot 1} & \cdots & e^{\frac{2\pi i}{d}(d-1)\cdot(d-1)} \end{pmatrix} \tag{4}$$

and the inverse quantum Fourier transformation

$$H_d^{-1} = \frac{1}{\sqrt{d}} \begin{pmatrix} 1 & 1 & \cdots & 1 \\ 1 & e^{-\frac{2\pi i}{d}1\cdot 1} & \cdots & e^{-\frac{2\pi i}{d}(d-1)\cdot 1} \\ \cdots & & & \cdots \\ 1 & e^{-\frac{2\pi i}{d}1\cdot(d-1)} & \cdots & e^{-\frac{2\pi i}{d}(d-1)\cdot(d-1)} \end{pmatrix} \tag{5}$$

can implement transformation between eigenvectors $|j\rangle$ and $|j\rangle_x$ $(j = 0, 1, \cdots, d-1)$:

$$|j\rangle_x = H_d|j\rangle, |j\rangle = H_d^{-1}|j\rangle_x. \tag{6}$$

The two-qudit C-NOT operation can be described as [68,89]:

$$U_C = \sum_{j_1, j_2=0}^{d-1} |j_1, j_1 \oplus_d j_2\rangle\langle j_1, j_2|. \tag{7}$$

Here $j_1 \oplus_d j_2$ means $j_1 + j_2$ mod d.

Similar to the case of partially unknown operations of N qubits, the partially unknown operations of one qudit that have only one nonzero element in every row or every column of their representation matrices can be remotely implemented with fewer resources [49,50]. Since the unique nonzero element in the first row has d possible positions, the nonzero element in the second row has $d-1$ possible positions, and the nonzero element in the dth row has one possible position, there are $d!$ restricted sets for the partially unknown operations of one qudit. The partially unknown operations of one qudit belonging to $d!$ restricted sets, as suggested by Wang, can be described as [49,50]:

$$\begin{aligned} U_{l_1, l_2, \cdots, l_{d-1}} &= e^{i\varphi_{0\oplus_2 l_1 \oplus_3 l_2 \oplus_4 \cdots \oplus_d l_{d-1}}} |0 \oplus_2 l_1 \oplus_3 l_2 \oplus_4 \cdots \oplus_d l_{d-1}\rangle\langle 0| \\ &+ e^{i\varphi_{1\oplus_2 l_1 \oplus_3 l_2 \oplus_4 \cdots \oplus_d l_{d-1}}} |1 \oplus_2 l_1 \oplus_3 l_2 \oplus_4 \cdots \oplus_d l_{d-1}\rangle\langle 1| \\ &+ e^{i\varphi_{2\oplus_3 l_2 \oplus_4 \cdots \oplus_d l_{d-1}}} |2 \oplus_3 l_2 \oplus_4 \cdots \oplus_d l_{d-1}\rangle\langle 2| \\ &+ \cdots + e^{i\varphi_{(d-1)\oplus_d l_{d-1}}} |(d-1) \oplus_d l_{d-1}\rangle\langle d-1|, \end{aligned} \tag{8}$$

where $l_j = 0, 1, \cdots, j$ $(j = 1, 2, \cdots, d-1)$ are used to label the $d!$ restricted sets. $\varphi_0, \varphi_1, \cdots, \varphi_{d-1}$ are d real parameters. $(k-1) \oplus_k l_{k-1}$ $(k = 2, \cdots, d)$ means $(k-1) + l_{k-1}$ mod k. The n senders $Alice_1, \cdots, Alice_n$ share the information of the partially unknown operation $U_{l_1, l_2, \cdots, l_{d-1}}(\varphi_0, \varphi_1, \cdots, \varphi_{d-1})$ to be remote implemented. That is, $Alice_u$ $(u = 1, \cdots, n)$ knows $\varphi_{u,0}, \varphi_{u,1}, \cdots, \varphi_{u,d-1}$. Here,

$$\begin{aligned}\sum_{u=1}^{n}\varphi_{u,0} &= \varphi_0\\ \sum_{u=1}^{n}\varphi_{u,1} &= \varphi_1\\ &\cdots\\ \sum_{u=1}^{n}\varphi_{u,d-1} &= \varphi_{d-1}.\end{aligned} \tag{9}$$

all the senders $Alice_1, \cdots, Alice_n$ cooperate with each other to remotely implement the partially unknown operations and help the remote receiver to prepare the target state.

For the hierarchical joint remote implementation of partially unknown operations, the n senders $Alice_1, \cdots, Alice_n$, y upper-grade agents $Bob_1, \cdots, Bob_y$ and z lower-grade agents $Charlie_1, \cdots, Charlie_z$ share a (n + y + z)-qudit entangled state. One of the upper-grade agents $Bob_1, \cdots, Bob_y$ has a qudit b in an arbitrary state $|\psi\rangle$. The upper-grade agent first performs a C-NOT operation on his entangled particle and particle b, and then carries out a Z-basis measurement on particle b. The n senders $Alice_1, \cdots, Alice_n$ first perform corresponding unitary operations on their entangled particles according to the measurement result obtained by the upper-grade agent, and then implement partially unknown operations according to their information of the partially unknown operation to be remotely implemented. The upper-grade agents $Bob_1, \cdots, Bob_y$ can reconstruct the desired state with the cooperation of one of the lower-grade agents and the lower-grade agents $Charlie_1, \cdots, Charlie_z$ need the cooperation of all the other agents to prepare the desired state.

For the hierarchical joint remote implementation of partially unknown operations, all the agents share a (n + y + z)-qudit entangled state. The (n + y + z)-qudit entangled state shared by $Alice_1, \cdots, Alice_n$, $Bob_1, \cdots, Bob_y$ $Charlie_1, \cdots, Charlie_z$ can be written as:

$$\begin{aligned}|\phi\rangle &= \frac{1}{d}\sum_{j_1,j_2=0}^{d-1} e^{\frac{2\pi i}{d}j_1 j_2}|j_1,\cdots,j_1\rangle_{A_1,\cdots,A_n}\\ &\quad |j_1,\cdots,j_1\rangle_{B_1,\cdots,B_y}|j_2,\cdots,j_2\rangle_{C_1,\cdots,C_z},\end{aligned} \tag{10}$$

where particles $A_1, \cdots, A_n$ belong to the sender $Alice_1, \cdots, Alice_n$, the upper-grade agents $Bob_1, \cdots, Bob_y$ are in possession of particles $B_1, \cdots, B_y$, and the lower-grade agents $Charlie_1, \cdots, Charlie_z$ are in possession of particles $C_1, \cdots, C_z$.

Without loss of generality, suppose Bob_1 has the qudit b in the arbitrary state [52]:

$$|\psi\rangle_b = \alpha_0|0\rangle + \alpha_1|1\rangle + \cdots + \alpha_{d-1}|d-1\rangle, \tag{11}$$

where $|\alpha_0|^2 + |\alpha_1|^2 + \cdots + |\alpha_{d-1}|^2 = 1$. The n, senders $Alice_1, \cdots, Alice_n$ want to jointly remotely implement partially unknown operation $U_{l_1,l_2,\cdots,l_{d-1}}$ and help the remote receiver prepare the target state $|\psi'\rangle$.

$$\begin{aligned}|\psi'\rangle &= U_{l_1,l_2,\cdots,l_{d-1}}|\psi\rangle\\ &= e^{i\varphi_{0\oplus_2 l_1\oplus_3 l_2\oplus_4\cdots\oplus_d l_{d-1}}}\alpha_0|0\oplus_2 l_1\oplus_3 l_2\oplus_4\cdots\oplus_d l_{d-1}\rangle\\ &+ e^{i\varphi_{1\oplus_2 l_1\oplus_3 l_2\oplus_4\cdots\oplus_d l_{d-1}}}\alpha_1|1\oplus_2 l_1\oplus_3 l_2\oplus_4\cdots\oplus_d l_{d-1}\rangle\\ &+ e^{i\varphi_{2\oplus_3 l_2\oplus_4\cdots\oplus_d l_{d-1}}}\alpha_2|2\oplus_3 l_2\oplus_4\cdots\oplus_d l_{d-1}\rangle\\ &+ \cdots + e^{i\varphi_{(d-1)\oplus_d l_{d-1}}}\alpha_{d-1}|(d-1)\oplus_d l_{d-1}\rangle.\end{aligned} \tag{12}$$

The state of particles $A_1, \cdots, A_n$, $B_1, \cdots, B_y$, $C_1, \cdots, C_z$,b can be written as:

$$\begin{aligned} |\Phi\rangle &= |\phi\rangle_{A_1,\cdots,A_n,B_1,\cdots,B_y,C_1,\cdots,C_z} \otimes |\psi\rangle_b \\ &= \frac{1}{d}\sum_{j_1,j_2,j_3=0}^{d-1} e^{\frac{2\pi i}{d}j_1 j_2}\alpha_{j_3}|j_1,\cdots,j_1\rangle_{A_1,\cdots,A_n}|j_1,\cdots,j_1\rangle_{B_1,\cdots,B_y} \\ &\quad |j_2,\cdots,j_2\rangle_{C_1,\cdots,C_z}|j_3\rangle_b. \end{aligned} \tag{13}$$

For the hierarchical joint remote implementation of the partially unknown operation $U_{l_1,l_2,\cdots,l_{d-1}}$, Bob_1 first implements C-NOT operation on qudits B_1 and b by using qudit B_1 as the control qudit, and then performs Z-basis measurement on qudit b. After the C-NOT operation, the state of particles $A_1, \cdots, A_n$, $B_1, \cdots, B_y$, $C_1, \cdots, C_z$, and b becomes:

$$\begin{aligned} |\Phi_1\rangle &= \frac{1}{d}\sum_{j_1,j_2,j_3=0}^{d-1} e^{\frac{2\pi i}{d}j_1 j_2}\alpha_{j_3}|j_1,\cdots,j_1\rangle_{A_1,\cdots,A_n}|j_1,\cdots,j_1\rangle_{B_1,\cdots,B_y} \\ &\quad |j_2,\cdots,j_2\rangle_{C_1,\cdots,C_z}|j_1 \oplus_d j_3\rangle_b. \end{aligned} \tag{14}$$

The state of particles $A_1, \cdots, A_n$, $B_1, \cdots, B_y$, $C_1, \cdots, C_z$ becomes $|\phi\rangle_1$ if the Z-basis measurement result is t $(t = 0, 1, \cdots, d-1)$.

$$\begin{aligned} |\phi_1\rangle &= \frac{1}{\sqrt{d}}\sum_{j_1,j_2=0}^{d-1} e^{\frac{2\pi i}{d}j_1 j_2}\alpha_{t\oplus_d(d-j_1)}|j_1,\cdots,j_1\rangle_{A_1,\cdots,A_n} \\ &\quad |j_1,\cdots,j_1\rangle_{B_1,\cdots,B_y}|j_2,\cdots,j_2\rangle_{C_1,\cdots,C_z}. \end{aligned} \tag{15}$$

To implement partially unknown operations remotely, $Alice_u$ $(u = 1, \cdots, n)$ first implements single qudit operation X_t on its qudit A_u according to the Z-basis measurement result t, and then implements partially unknown operation $U_{l_1,l_2,\cdots,l_{d-1}}(\varphi_{u,0}, \varphi_{u,1}, \cdots, \varphi_{u,d-1})$ in accordance with its information of $\varphi_{u,0}, \varphi_{u,1}, \cdots, \varphi_{u,d-1}$. The single qudit operation X_t in accordance with the Z-basis measurement result t can be written as:

$$X_t = \sum_{j=0}^{d-1} |t \oplus_d (d-j)\rangle\langle j|. \tag{16}$$

The state of particles $A_1, \cdots, A_n$, $B_1, \cdots, B_y$, $C_1, \cdots, C_z$ becomes $|\phi\rangle_2$ after $Alice_u$ $(u = 1, \cdots, n)$ implements single qudit operation X_t on its qudit A_u.

$$\begin{aligned} |\phi_2\rangle &= \frac{1}{\sqrt{d}}\sum_{j_1,j_2=0}^{d-1} e^{\frac{2\pi i}{d}(t-j_1)j_2}\alpha_{j_1}|j_1,\cdots,j_1\rangle_{A_1,\cdots,A_n} \\ &\quad |t \oplus_d (d-j_1),\cdots,t \oplus_d (d-j_1)\rangle_{B_1,\cdots,B_y} \\ &\quad |j_2,\cdots,j_2\rangle_{C_1,\cdots,C_z}. \end{aligned} \tag{17}$$

After the single qudit operation X_t, $Alice_u$ $(u = 1, \cdots, n)$ implements partially unknown operation $U_{l_1,l_2,\cdots,l_{d-1}}(\varphi_{u,0}, \varphi_{u,1}, \cdots, \varphi_{u,d-1})$ in accordance with its information of

$\varphi_{u,0}, \varphi_{u,1}, \cdots, \varphi_{u,d-1}$ on qudit A_u. The state of particles $A_1, \cdots, A_n, B_1, \cdots, B_y, C_1, \cdots, C_z$ becomes (without normalization):

$$\begin{aligned}
|\phi_3\rangle &= \sum_{j_2=0}^{d-1} |j_2, \cdots, j_2\rangle_{C_1,\cdots,C_z} [\alpha_0 e^{\frac{2\pi i}{d} t j_2} e^{i(\varphi_{1,0\oplus_2 l_1 \cdots \oplus_d l_{d-1}} + \cdots + \varphi_{n,0\oplus_2 l_1 \cdots \oplus_d l_{d-1}})} \\
&\quad |0 \oplus_2 l_1 \cdots \oplus_d l_{d-1}, \cdots, 0 \oplus_2 l_1 \cdots \oplus_d l_{d-1}\rangle |t, \cdots, t\rangle \\
&+ \alpha_1 e^{\frac{2\pi i}{d}(t+d-1) j_2} e^{i(\varphi_{1,1\oplus_2 l_1 \cdots \oplus_d l_{d-1}} + \cdots + \varphi_{n,1\oplus_2 l_1 \cdots \oplus_d l_{d-1}})} \\
&\quad |1 \oplus_2 l_1 \cdots \oplus_d l_{d-1}, \cdots, 1 \oplus_2 l_1 \cdots \oplus_d l_{d-1}\rangle \\
&\quad |t \oplus_d (d-1), \cdots, t \oplus_d (d-1)\rangle + \cdots \\
&+ \alpha_{d-1} e^{\frac{2\pi i}{d}(t+1) j_2} e^{i(\varphi_{1,(d-1)\oplus_d l_{d-1}} + \cdots + \varphi_{n,(d-1)\oplus_d l_{d-1}})} \\
&\quad |(d-1) \oplus_d l_{d-1}, \cdots, (d-1) \oplus_d l_{d-1}\rangle \\
&\quad |t \oplus_d 1, \cdots, t \oplus_d 1\rangle]_{A_1,\cdots,A_n,B_1,\cdots,B_y} \\
&= \sum_{j_2=0}^{d-1} |j_2, \cdots, j_2\rangle_{C_1,\cdots,C_z} [\alpha_0 e^{\frac{2\pi i}{d} t j_2} e^{i\varphi_{0\oplus_2 l_1 \cdots \oplus_d l_{d-1}}} \\
&\quad |0 \oplus_2 l_1 \cdots \oplus_d l_{d-1}, \cdots, 0 \oplus_2 l_1 \cdots \oplus_d l_{d-1}\rangle |t, \cdots, t\rangle \\
&+ \alpha_1 e^{\frac{2\pi i}{d}(t+d-1) j_2} e^{i\varphi_{1\oplus_2 l_1 \cdots \oplus_d l_{d-1}}} \\
&\quad |1 \oplus_2 l_1 \cdots \oplus_d l_{d-1}, \cdots, 1 \oplus_2 l_1 \cdots \oplus_d l_{d-1}\rangle \\
&\quad |t \oplus_d (d-1), \cdots, t \oplus_d (d-1)\rangle + \cdots \\
&+ \alpha_{d-1} e^{\frac{2\pi i}{d}(t+1) j_2} e^{i\varphi_{(d-1)\oplus_d l_{d-1}}} |(d-1) \oplus_d l_{d-1}, \cdots, (d-1) \oplus_d l_{d-1}\rangle \\
&\quad |t \oplus_d 1, \cdots, t \oplus_d 1\rangle]_{A_1,\cdots,A_n,B_1,\cdots,B_y}.
\end{aligned} \tag{18}$$

To jointly remotely implement the partially unknown operation, $Alice_u$ $(u = 1, \cdots, n)$ performs X-basis measurement on his entangled particle A_u. The state of particles $A_1, \cdots, A_n, B_1, \cdots, B_y, C_1, \cdots, C_z$ can be rewritten as (neglecting the whole factor):

$$\begin{aligned}
|\phi_3\rangle &= \sum_{r_1,\cdots,r_n,j_2=0}^{d-1} |j_2, \cdots, j_2\rangle_{C_1,\cdots,C_z} [\alpha_0 e^{\frac{2\pi i}{d} t j_2} \\
&\quad e^{i\varphi_{0\oplus_2 l_1 \cdots \oplus_d l_{d-1}}} e^{-\frac{2\pi i}{d}(r_1+\cdots+r_n)(0\oplus_2 l_1 \cdots \oplus_d l_{d-1})} \\
&\quad |r_1\rangle_x \otimes \cdots \otimes |r_n\rangle_x |t, \cdots, t\rangle + \alpha_1 e^{\frac{2\pi i}{d}(t+d-1) j_2} \\
&\quad e^{i\varphi_{1\oplus_2 l_1 \cdots \oplus_d l_{d-1}}} e^{-\frac{2\pi i}{d}(r_1+\cdots+r_n)(1\oplus_2 l_1 \cdots \oplus_d l_{d-1})} \\
&\quad |r_1\rangle_x \otimes \cdots \otimes |r_n\rangle_x |t \oplus_d (d-1), \cdots, t \oplus_d (d-1)\rangle \\
&\quad + \cdots + \alpha_{d-1} e^{\frac{2\pi i}{d}(t+1) j_2} e^{i\varphi_{(d-1)\oplus_d l_{d-1}}} \\
&\quad e^{-\frac{2\pi i}{d}(r_1+\cdots+r_n)((d-1)\oplus_d l_{d-1})} |r_1\rangle_x \otimes \cdots \otimes |r_n\rangle_x \\
&\quad |t \oplus_d 1, \cdots, t \oplus_d 1\rangle]_{A_1,\cdots,A_n,B_1,\cdots,B_y}.
\end{aligned} \tag{19}$$

The state of particles $B_1, \cdots, B_y, C_1, \cdots, C_z$ becomes $|\phi_4\rangle$ if the measurement result obtained by A_u $(u = 1, \cdots, n)$ is $|r_u\rangle_x$ $(r_u = 0, \cdots, d-1)$.

$$\begin{aligned}
|\phi_4\rangle &= \sum_{j_2=0}^{d-1} |j_2, \cdots, j_2\rangle_{C_1,\cdots,C_z} [\alpha_0 e^{\frac{2\pi i}{d} t j_2} \\
&\quad e^{i\varphi_{0\oplus_2 l_1 \cdots \oplus_d l_{d-1}}} e^{-\frac{2\pi i}{d}(0\oplus_2 l_1 \cdots \oplus_d l_{d-1})r} |t, \cdots, t\rangle \\
&+ \alpha_1 e^{\frac{2\pi i}{d}(t+d-1) j_2} e^{i\varphi_{1\oplus_2 l_1 \cdots \oplus_d l_{d-1}}} e^{-\frac{2\pi i}{d}(1\oplus_2 l_1 \cdots \oplus_d l_{d-1})r} \\
&\quad |t \oplus_d (d-1), \cdots, t \oplus_d (d-1)\rangle + \cdots \\
&+ \alpha_{d-1} e^{\frac{2\pi i}{d}(t+1) j_2} e^{i\varphi_{(d-1)\oplus_d l_{d-1}}} e^{-\frac{2\pi i}{d}((d-1)\oplus_d l_{d-1})r} \\
&\quad |t \oplus_d 1, \cdots, t \oplus_d 1\rangle]_{B_1,\cdots,B_y},
\end{aligned} \tag{20}$$

where $r = r_1 + \cdots + r_n$.

Firstly, we suppose that the agents agree to reconstruct the desired state $|\psi'\rangle$ at the upper-grade agent Bob_k's site $(k = 1, \cdots, y)$. The quantum circuit for the hierarchial joint remote implementation of partially unknown operations of one qudit with upper-grade agent is shown in Figure 1. To jointly remotely implement the partially unknown operations, the lower-grade agent $Charlie_p$ $(p = 1, \cdots, z)$ performs a Z-basis measurement on its qudit C_p. The upper-grade agents $Bob_1, \cdots, Bob_{k-1}, Bob_{k+1}, \cdots, Bob_y$ perform X-basis measurements on qudits $B_1, \cdots, B_{k-1}, B_{k+1}, \cdots, B_y$. The receiver Bob_k can prepare the target state $|\psi'\rangle$ by cooperating with one of the lower-grade agents.

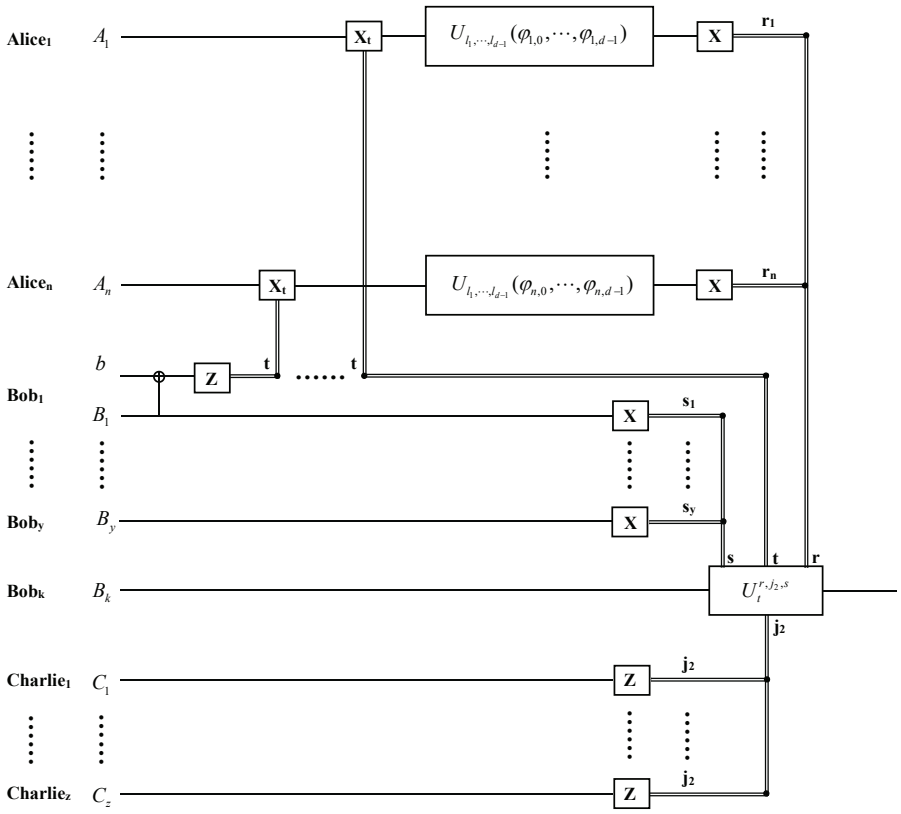

Figure 1. The quantum circuit for the hierarchial joint remote implementation of partially unknown operations of one qudit with upper-grade agent Bob_k. Classical communication from the sender $Alice_j$ $(j = 1, \cdots, n)$, the upper-grade agents $Bob_1, \cdots, Bob_{k-1}, Bob_{k+1}, \cdots, Bob_y$ and the the lower-grade agent $Charlie_p$ $(p = 1, \cdots, z)$ to the receiver Bob_k are represented by double lines. $r_1, \cdots, r_n$, $s_1, \cdots, s_y$ and t, j_2 denote the results of the generalized X-basis measurements and generalized Z-basis measurements. X_t, $U_{l_1,\cdots,l_{d-1}}(\varphi_{j,0}, \cdots, \varphi_{j,d-1})$ in the solid-line boxes denote the single-qudit operations performed by the sender $Alice_j$, and $U_t^{r,j_2,s}$ in the solid-line box denotes the unitary operation performed by the receiver.

After the Z-basis measurement, the state of particles $B_1, \cdots, B_y$ becomes $|\phi_5\rangle$ if the measurement result obtained by $Charlie_p$ $(p = 1, \cdots, z)$ is $|j_2\rangle$ $(j_2 = 0, \cdots, d-1)$.

$$\begin{aligned}
|\phi_5\rangle &= [\alpha_0 e^{\frac{2\pi i}{d} t j_2} e^{i\varphi_{0\oplus_2 l_1 \cdots \oplus_d l_{d-1}}} e^{-\frac{2\pi i}{d}(0\oplus_2 l_1 \cdots \oplus_d l_{d-1})r} |t, \cdots, t\rangle \\
&+ \alpha_1 e^{\frac{2\pi i}{d}(t+d-1) j_2} e^{i\varphi_{1\oplus_2 l_1 \cdots \oplus_d l_{d-1}}} e^{-\frac{2\pi i}{d}(1\oplus_2 l_1 \cdots \oplus_d l_{d-1})r} \\
&\quad |t \oplus_d (d-1), \cdots, t \oplus_d (d-1)\rangle + \cdots \\
&+ \alpha_{d-1} e^{\frac{2\pi i}{d}(t+1) j_2} e^{i\varphi_{(d-1)\oplus_d l_{d-1}}} e^{-\frac{2\pi i}{d}((d-1)\oplus_d l_{d-1})r} \\
&\quad |t \oplus_d 1, \cdots, t \oplus_d 1\rangle]_{B_1,\cdots,B_y}. \qquad (21)
\end{aligned}$$

To implement the partially unknown operations remotely, the upper-grade agents $Bob_1, \cdots, Bob_{k-1}, Bob_{k+1}, \cdots, Bob_y$ perform X-basis measurements on their qudits $B_1, \cdots, B_{k-1}, B_{k+1}, \cdots, B_y$. The state of particles $B_1, \cdots, B_y$ can be rewritten as:

$$\begin{aligned}
|\phi_6\rangle &= \sum_{\substack{s_1,\cdots,s_{k-1},\\ s_{k+1},\cdots,s_y=0}}^{d-1} [\alpha_0 e^{-\frac{2\pi i}{d}(s_1+\cdots+s_{k-1}+s_{k+1}+\cdots+s_y)t} \\
&\quad e^{\frac{2\pi i}{d}tj_2} e^{i\varphi_{0\oplus_2 l_1\cdots\oplus_d l_{d-1}}} e^{-\frac{2\pi i}{d}(0\oplus_2 l_1\cdots\oplus_d l_{d-1})r} \\
&\quad |s_1\rangle_x \otimes \cdots \otimes |s_{k-1}\rangle_x |t\rangle |s_{k+1}\rangle_x \otimes \cdots \otimes |s_y\rangle_x \\
&+ \alpha_1 e^{-\frac{2\pi i}{d}(s_1+\cdots+s_{k-1}+s_{k+1}+\cdots+s_y)(t+d-1)} \\
&\quad e^{\frac{2\pi i}{d}(t+d-1)j_2} e^{i\varphi_{1\oplus_2 l_1\cdots\oplus_d l_{d-1}}} e^{-\frac{2\pi i}{d}(1\oplus_2 l_1\cdots\oplus_d l_{d-1})r} \\
&\quad |s_1\rangle_x \otimes \cdots \otimes |s_{k-1}\rangle_x |t\oplus_d (d-1)\rangle |s_{k+1}\rangle_x \otimes \cdots \otimes |s_y\rangle_x + \cdots \\
&+ \alpha_{d-1} e^{-\frac{2\pi i}{d}(s_1+\cdots+s_{k-1}+s_{k+1}+\cdots+s_y)(t+1)} e^{\frac{2\pi i}{d}(t+1)j_2} e^{i\varphi_{(d-1)\oplus_d l_{d-1}}} \\
&\quad e^{-\frac{2\pi i}{d}((d-1)\oplus_d l_{d-1})r} |s_1\rangle_x \otimes \cdots \otimes |s_{k-1}\rangle_x |t\oplus_d 1\rangle |s_{k+1}\rangle_x \\
&\quad \otimes \cdots \otimes |s_y\rangle_x]_{B_1,\cdots,B_{k-1},B_k,B_{k+1},\cdots,B_y}.
\end{aligned} \tag{22}$$

The state of particle B_k becomes $|\Psi\rangle_{B_k}$ if the measurement results obtained by $Bob_1, \cdots, Bob_{k-1}, Bob_{k+1}, \cdots, Bob_y$ are $|s_1\rangle_x, \cdots, |s_{k-1}\rangle_x, |s_{k+1}\rangle_x, \cdots, |s_y\rangle_x$.

$$\begin{aligned}
|\Psi\rangle_{B_k} &= [\alpha_0 e^{-\frac{2\pi i}{d}st} e^{\frac{2\pi i}{d}tj_2} e^{i\varphi_{0\oplus_2 l_1\cdots\oplus_d l_{d-1}}} e^{-\frac{2\pi i}{d}(0\oplus_2 l_1\cdots\oplus_d l_{d-1})r} |t\rangle \\
&+ \alpha_1 e^{-\frac{2\pi i}{d}s(t+d-1)} e^{\frac{2\pi i}{d}(t+d-1)j_2} e^{i\varphi_{1\oplus_2 l_1\cdots\oplus_d l_{d-1}}} \\
&\quad e^{-\frac{2\pi i}{d}(1\oplus_2 l_1\cdots\oplus_d l_{d-1})r} |t\oplus_d (d-1)\rangle + \cdots \\
&+ \alpha_{d-1} e^{-\frac{2\pi i}{d}s(t+1)} e^{\frac{2\pi i}{d}(t+1)j_2} e^{i\varphi_{(d-1)\oplus_d l_{d-1}}} \\
&\quad e^{-\frac{2\pi i}{d}((d-1)\oplus_d l_{d-1})r} |t\oplus_d 1\rangle]_{B_k},
\end{aligned} \tag{23}$$

where $s = s_1 + \cdots + s_{k-1} + s_{k+1} + \cdots + s_y$.

The single-qudit operation

$$\begin{aligned}
U_t^{r,j_2,s} &= e^{\frac{2\pi i}{d}(s-j_2)t} e^{\frac{2\pi i}{d}(0\oplus_2 l_1\cdots\oplus_d l_{d-1})r} |0\oplus_2 l_1\cdots\oplus_d l_{d-1}\rangle\langle t| \\
&+ e^{\frac{2\pi i}{d}(s-j_2)(t+d-1)} e^{\frac{2\pi i}{d}(1\oplus_2 l_1\cdots\oplus_d l_{d-1})r} \\
&\quad |1\oplus_2 l_1\cdots\oplus_d l_{d-1}\rangle\langle t\oplus_d (d-1)| + \cdots \\
&+ e^{\frac{2\pi i}{d}(s-j_2)(t+1)} e^{\frac{2\pi i}{d}((d-1)\oplus_d l_{d-1})r} \\
&\quad |(d-1)\oplus_d l_{d-1}\rangle\langle t\oplus_d 1|
\end{aligned} \tag{24}$$

in accordance with measurement results t, r, j_2, s can transform state $|\Psi\rangle_{B_k}$ to the target state $|\psi'\rangle$:

$$|\psi'\rangle_{B_k} = U_t^{r,j_2,s} |\Psi\rangle_{B_k}. \tag{25}$$

Similar to the hierarchical remote implementation of partially unknown operation of one qubit [61], the upper-grade agent needs to only cooperate with one of the lower-grade agents to prepare the target state.

Now, we discuss another case, in which all of the agents agree to reconstruct the desired state $|\psi'\rangle$ at the lower-grade agent $Charlie_p$'s site ($p = 1, \cdots, z$). The quantum circuit for the hierarchical joint remote implementation of partially unknown operations of one qudit with lower-grade agent is shown in Figure 2. To reconstruct the desired state $|\psi'\rangle$ at the lower-grade agent $Charlie_p$'s site, the other lower-grade agents $Charlie_1, \cdots, Charlie_{p-1}, Charlie_{p+1}, \cdots, Charlie_z$ and the upper-grade agents $Bob_1, \cdots, Bob_y$ perform X-basis measurements on their entangled particles $C_1, \cdots, C_{p-1}, C_{p+1}, \cdots, C_z$ and $B_1, \cdots, B_y$, after $Alice_u$ ($u = 1, \cdots, n$) implements

the partially unknown operation $U_{l_1,l_2,\cdots,l_{d-1}}(\varphi_{l,0},\varphi_{l,1},\cdots,\varphi_{l,d-1})$ and performs an x-basis measurement on qudit A_u. The state $|\phi_4\rangle$ can be rewritten as:

$$\begin{aligned}
& |\phi_4\rangle_{C_1,\cdots,C_{p-1},C_{p+1},\cdots,C_z,B_1,\cdots,B_y,C_p} \\
= & \sum_{\substack{q_1,\cdots,q_{p-1},q_{p+1},\\ \cdots,q_z,s_1,\cdots,s_y=0}}^{d-1} |q_1\rangle_x \otimes \cdots \otimes |q_{p-1}\rangle_x \otimes |q_{p+1}\rangle_x \otimes \cdots \\
& \otimes |q_z\rangle_x |s_1\rangle_x \otimes \cdots \otimes |s_y\rangle_x \{\alpha_0 e^{i\varphi_{0\oplus_2 l_1\cdots\oplus_d l_{d-1}}} \\
& e^{-\frac{2\pi i}{d}(0\oplus_2 l_1\cdots\oplus_d l_{d-1})r} e^{-\frac{2\pi i}{d}ts} [\sum_{j_2=0}^{d-1} e^{\frac{2\pi i}{d}(t-q)j_2}|j_2\rangle] \\
+ & \alpha_1 e^{i\varphi_{1\oplus_2 l_1\cdots\oplus_d l_{d-1}}} e^{-\frac{2\pi i}{d}(1\oplus_2 l_1\cdots\oplus_d l_{d-1})r} \\
& e^{-\frac{2\pi i}{d}(t+d-1)s} [\sum_{j_2=0}^{d-1} e^{\frac{2\pi i}{d}(t+d-1-q)j_2}|j_2\rangle] + \cdots \\
+ & \alpha_{d-1} e^{i\varphi_{(d-1)\oplus_d l_{d-1}}} e^{-\frac{2\pi i}{d}((d-1)\oplus_d l_{d-1})r} \\
& e^{-\frac{2\pi i}{d}(t+1)s} [\sum_{j_2=0}^{d-1} e^{\frac{2\pi i}{d}(t+1-q)j_2}|j_2\rangle]\}.
\end{aligned} \tag{26}$$

Here, $q = q_1 + \cdots + q_{p-1} + q_{p+1} + \cdots + q_z$.

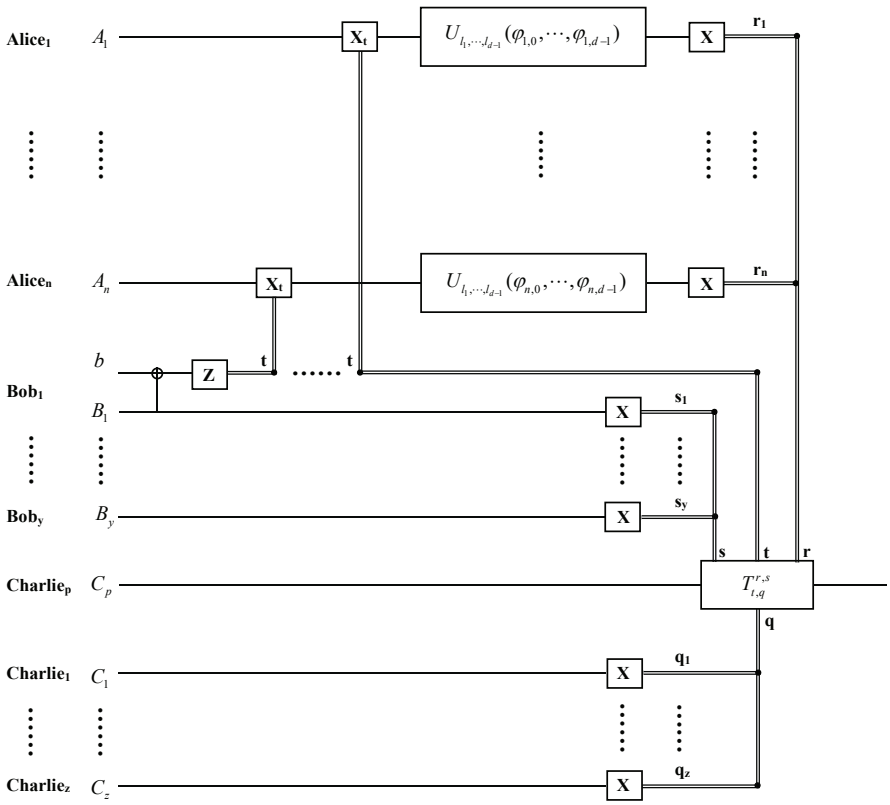

Figure 2. The quantum circuit for the hierarchial joint remote implementation of partially unknown operations of one qudit with lower-grade agent $Charlie_p$. $r_1,\cdots,r_n$, $s_1,\cdots,s_y$, $q_1,\cdots,q_z$ and t, j_2 are the results of the generalized X-basis measurements and generalized Z-basis measurements. $T^{r,s}_{t,q}$ in the solid-line box denotes the unitary operation performed by the receiver $Charlie_p$.

The state of particle C_p becomes $|\omega\rangle_{C_p}$ if the measurement results obtained by $Charlie_1, \cdots, Charlie_{p-1}, Charlie_{p+1}, \cdots, Charlie_z$ and $Bob_1, \cdots, Bob_y$ are $|q_1\rangle_x, \cdots, |q_{p-1}\rangle_x, |q_{p+1}\rangle_x, \cdots, |q_z\rangle_x$ and $|s_1\rangle_x, \cdots, |s_y\rangle_x$.

$$\begin{aligned}
|\omega\rangle_{C_p} &= \alpha_0 e^{i\varphi_{0\oplus_2 l_1\cdots\oplus_d l_{d-1}}} e^{-\frac{2\pi i}{d}(0\oplus_2 l_1\cdots\oplus_d l_{d-1})r} \\
&\quad e^{-\frac{2\pi i}{d}ts}[\sum_{j_2=0}^{d-1} e^{\frac{2\pi i}{d}(t-q)j_2}|j_2\rangle] \\
&+ \alpha_1 e^{i\varphi_{1\oplus_2 l_1\cdots\oplus_d l_{d-1}}} e^{-\frac{2\pi i}{d}(1\oplus_2 l_1\cdots\oplus_d l_{d-1})r} \\
&\quad e^{-\frac{2\pi i}{d}(t+d-1)s}[\sum_{j_2=0}^{d-1} e^{\frac{2\pi i}{d}(t+d-1-q)j_2}|j_2\rangle] + \cdots \\
&+ \alpha_{d-1} e^{i\varphi_{(d-1)\oplus_d l_{d-1}}} e^{-\frac{2\pi i}{d}((d-1)\oplus_d l_{d-1})r} \\
&\quad e^{-\frac{2\pi i}{d}(t+1)s}[\sum_{j_2=0}^{d-1} e^{\frac{2\pi i}{d}(t+1-q)j_2}|j_2\rangle].
\end{aligned} \tag{27}$$

To reconstruct the desired state $|\psi'\rangle$, $Charlie_p$ first applies the inverse quantum Fourier transformation on its particle C_p, and then applies corresponding unitary operation on its particle in accordance with all the other agents measurement results. The inverse quantum Fourier transformation H_d^{-1} transform quantum state $|\omega\rangle_{C_p}$ to

$$\begin{aligned}
|\omega_1\rangle_{C_p} &= \alpha_0 e^{i\varphi_{0\oplus_2 l_1\cdots\oplus_d l_{d-1}}} e^{-\frac{2\pi i}{d}(0\oplus_2 l_1\cdots\oplus_d l_{d-1})r} \\
&\quad e^{-\frac{2\pi i}{d}ts} H_d^{-1}[\sum_{j_2=0}^{d-1} e^{\frac{2\pi i}{d}(t-q)j_2}|j_2\rangle] \\
&+ \alpha_1 e^{i\varphi_{1\oplus_2 l_1\cdots\oplus_d l_{d-1}}} e^{-\frac{2\pi i}{d}(1\oplus_2 l_1\cdots\oplus_d l_{d-1})r} \\
&\quad e^{-\frac{2\pi i}{d}(t+d-1)s} H_d^{-1}[\sum_{j_2=0}^{d-1} e^{\frac{2\pi i}{d}(t+d-1-q)j_2}|j_2\rangle] + \cdots \\
&+ \alpha_{d-1} e^{i\varphi_{(d-1)\oplus_d l_{d-1}}} e^{-\frac{2\pi i}{d}((d-1)\oplus_d l_{d-1})r} \\
&\quad e^{-\frac{2\pi i}{d}(t+1)s} H_d^{-1}[\sum_{j_2=0}^{d-1} e^{\frac{2\pi i}{d}(t+1-q)j_2}|j_2\rangle] \\
&= \alpha_0 e^{i\varphi_{0\oplus_2 l_1\cdots\oplus_d l_{d-1}}} e^{-\frac{2\pi i}{d}(0\oplus_2 l_1\cdots\oplus_d l_{d-1})r} \\
&\quad e^{-\frac{2\pi i}{d}ts}|t\oplus_d (d-q)\rangle \\
&+ \alpha_1 e^{i\varphi_{1\oplus_2 l_1\cdots\oplus_d l_{d-1}}} e^{-\frac{2\pi i}{d}(1\oplus_2 l_1\cdots\oplus_d l_{d-1})r} \\
&\quad e^{-\frac{2\pi i}{d}(t+d-1)s}|t\oplus_d (d-1-q)\rangle + \cdots \\
&+ \alpha_{d-1} e^{i\varphi_{(d-1)\oplus_d l_{d-1}}} e^{-\frac{2\pi i}{d}((d-1)\oplus_d l_{d-1})r} \\
&\quad e^{-\frac{2\pi i}{d}(t+1)s}|t\oplus_d (1-q)\rangle.
\end{aligned} \tag{28}$$

The unitary operation $T_{t,q}^{r,s}$

$$\begin{aligned}
T_{t,q}^{r,s} &= e^{\frac{2\pi i}{d}(0\oplus_2 l_1\cdots\oplus_d l_{d-1})r} e^{\frac{2\pi i}{d}ts} \\
&\quad |0\oplus_2 l_1\cdots\oplus_d l_{d-1}\rangle\langle t\oplus_d (d-q)| \\
&+ e^{\frac{2\pi i}{d}(1\oplus_2 l_1\cdots\oplus_d l_{d-1})r} e^{\frac{2\pi i}{d}(t+d-1)s} \\
&\quad |1\oplus_2 l_1\cdots\oplus_d l_{d-1}\rangle\langle t\oplus_d (d-1-q)| + \cdots \\
&+ e^{\frac{2\pi i}{d}((d-1)\oplus_d l_{d-1})r} e^{\frac{2\pi i}{d}(t+1)s} \\
&\quad |(d-1)\oplus_d l_{d-1}\rangle\langle t\oplus_d (1-q)|
\end{aligned} \tag{29}$$

in accordance with the senders' measurement results r and t, the upper-grade agents' measurement results and the other lower-grade agents' measurement result q will transform state $|\omega_1\rangle_{C_p}$ to the target state $|\psi\rangle_{C_p}$.

$$|\psi\rangle_{C_p} = T_{t,q}^{r,s}|\omega_1\rangle_{C_p}. \tag{30}$$

The partially unknown operations of one qudit can be remotely implemented via local unitary operations, classical communication, and one multiparticle entangled state. Compared to previously protocol for remotely implementing partially unknown operations of one qubit, the protocol has the advantage of having a high channel capacity by transmitting d coefficients $\varphi_0, \cdots, \varphi_{d-1}$ via one multiparticle entangled state [48].

3. Hierarchial Joint Remote Implementation of Partially Unknown Operations of m Qudit via m Multiparticle High-Dimensional Entangled States

Now, let us generalize the protocol for the hierarchial joint remote implementation of partially unknown operations of m qudit with m multiparticle high-dimensional entangled states. The senders share the information of the partially unknown operations to be remotely implemented and cooperate with each other to help the remote receiver to reconstruct the desired state.

Similar to the case for the remote implementation of partially unknown operations of one qudit, the partially unknown operations of m qudits have only one nonzero element in every row or every column of their representation matrices. There are $M!$ $(M = d^m)$ restricted sets for partially unknown operations of m qudits, since the unique nonzero element in the first row has M possible positions, the nonzero element in the second row has $M-1$ possible positions, and the nonzero element in the Mth row has one possible position. The partially unknown operations of m qudit belongs to $M!$ restricted sets as suggested by Wang can be described as [50]:

$$\begin{aligned} U_{l_1,l_2,\cdots,l_M} &= e^{i\varphi_{0\oplus_2 l_1\oplus_3 l_2\oplus_4\cdots\oplus_M l_{M-1}}}|t_1^0,\cdots,t_m^0\rangle\langle 0,\cdots,0| \\ &+ e^{i\varphi_{1\oplus_2 l_1\oplus_3 l_2\oplus_4\cdots\oplus_M l_{M-1}}}|t_1^1,\cdots,t_m^1\rangle\langle 0,\cdots,1| \\ &+ e^{i\varphi_{2\oplus_3 l_2\oplus_4\cdots\oplus_M l_{M-1}}}|t_1^2,\cdots,t_m^2\rangle\langle 0,\cdots,2| + \cdots \\ &+ e^{i\varphi_{(M-1)\oplus_M l_{M-1}}}|t_1^{M-1},\cdots,t_m^{M-1}\rangle\langle d-1,\cdots,d-1|, \end{aligned} \tag{31}$$

where $\varphi_0, \varphi_1, \cdots, \varphi_{M-1}$ are M real parameters, $l_j = 0, 1, \cdots, j$ $(j = 1, 2, \cdots, M-1)$ are used to label the $M!$ restricted sets. $t_j^l = 0, \cdots, d-1$ $(j = 1, \cdots, m, l = 0, \cdots, M-1)$ and

$$\begin{aligned} &t_1^0 d^{m-1} + \cdots + t_m^0 = 0 \oplus_2 l_1 \oplus_3 l_2 \oplus_4 \cdots \oplus_M l_{M-1} \\ &t_1^1 d^{m-1} + \cdots + t_m^1 = 1 \oplus_2 l_1 \oplus_3 l_2 \oplus_4 \cdots \oplus_M l_{M-1} \\ &\cdots \\ &t_1^{M-1} d^{m-1} + \cdots + t_m^{M-1} = (M-1) \oplus_M l_{M-1}. \end{aligned} \tag{32}$$

Similar to the case for the hierarchical joint remote implementation of partially unknown operations of one qudit, the n senders $Alice_1, \cdots, Alice_n$ share the information of the partially unknown operation $U_{l_1,l_2,\cdots,l_M}(\varphi_0, \varphi_1, \cdots, \varphi_{M-1})$ to be remotely implemented. That is, $Alice_u$ $(u = 1, \cdots, n)$ knows $\varphi_{u,0}, \varphi_{u,1}, \cdots, \varphi_{u,M-1}$. Here, $\sum_{u=1}^{n} \varphi_{u,j} = \varphi_j$ $(j = 0, 1, \cdots, M-1)$. All the senders $Alice_1, \cdots, Alice_n$ cooperate with each other to remote implement the partially unknown operations and help the remote receiver to prepare the target state.

Similar to the case for the hierarchical joint remote implementation of partially unknown operations of one qudit, the n senders $Alice_1, \cdots, Alice_n$, y upper-grade agents $Bob_1, \cdots, Bob_y$ and z lower-grade agents $Charlie_1, \cdots, Charlie_z$ share m (n + y + z)-qudit entangled states. One of the upper-grade agents has the qudits $b_1, \cdots, b_m$ in the arbitrary m-qudit state. For the hierarchical joint remote implementation of partially unknown opera-

tions, the upper-grade agent first carries out m C-NOT operation on his entangled particles and particles $b_1, \cdots, b_m$, and then performs Z-basis measurements on particles $b_1, \cdots, b_m$. The n senders $Alice_1, \cdots, Alice_n$ first perform corresponding unitary operations on their entangled particles according to the measurement result obtained by the upper-grade agent, and then implement partially unknown operations according to their information of the partially unknown operation to be remotely implemented. The receivers are hierarchized according to their abilities to reconstruct the desired state. That is, the upper-grade agents $Bob_1, \cdots, Bob_y$ can prepare the desired state with the cooperation of one of the lower-grade agents and the lower-grade agents $Charlie_1, \cdots, Charlie_z$ need the cooperation of all the other agents to prepare the target state.

To hierarchically jointly remotely implement the partially unknown operations of m qudits, the n senders $Alice_1, \cdots, Alice_n$, y upper-grade agents $Bob_1, \cdots, Bob_y$ and z lower-grade agents $Charlie_1, \cdots, Charlie_z$ share m (n+y+z)-qudit entangled states.

$$\begin{aligned}
|\phi'\rangle &= |\phi\rangle^{\otimes m} \\
&= \sum_{\substack{j_{11}, j_{12}, \cdots, \\ j_{m1}, j_{m2}=0}}^{d-1} e^{\frac{2\pi i}{d} j_{11} j_{12}} \cdots e^{\frac{2\pi i}{d} j_{m1} j_{m2}} \\
&\quad |j_{11}, \cdots, j_{11}\rangle_{A_{11}, \cdots, A_{1n}} |j_{11}, \cdots, j_{11}\rangle_{B_{11}, \cdots, B_{1y}} \\
&\quad |j_{12}, \cdots, j_{12}\rangle_{C_{11}, \cdots, C_{1z}} \cdots \\
&\quad |j_{m1}, \cdots, j_{m1}\rangle_{A_{m1}, \cdots, A_{mn}} |j_{m1}, \cdots, j_{m1}\rangle_{B_{m1}, \cdots, B_{my}} \\
&\quad |j_{m2}, \cdots, j_{m2}\rangle_{C_{m1}, \cdots, C_{mz}}.
\end{aligned} \tag{33}$$

where particles $A_{1u}, \cdots, A_{mu}$ belong to the sender $Alice_u$ $(u = 1, \cdots, n)$, the upper-grade agents Bob_k $(k = 1, \cdots, y)$ are in possession of particles $B_{1k}, \cdots, B_{mk}$, and the lower-grade agents $Charlie_p$ $(p = 1, \cdots, z)$ are in possession of particles $C_{1p}, \cdots, C_{mp}$.

Without loss of generality, suppose Bob_1 has the qudits $b_1, \cdots, b_m$ in the arbitrary m-qudit state [89]:

$$|\psi\rangle_{b_1, \cdots, b_m} = \sum_{l_1, \cdots, l_m=0}^{d-1} \alpha_{l_1, \cdots, l_m} |l_1, \cdots, l_m\rangle, \tag{34}$$

where

$$\sum_{l_1, \cdots, l_m=0}^{d-1} |\alpha_{l_1, \cdots, l_m}|^2. \tag{35}$$

The n senders $Alice_1, \cdots, Alice_n$ want to jointly remotely implement the partially unknown operation $U_{l_1, l_2, \cdots, l_{d-1}}$ and help the remote receiver prepare the target state $|\psi'\rangle$.

$$\begin{aligned}
|\psi'\rangle &= U_{l_1, l_2, \cdots, l_{M-1}} |\psi\rangle \\
&= e^{i\varphi_{0 \oplus_2 l_1 \oplus_3 l_2 \oplus_4 \cdots \oplus_M l_{M-1}}} \alpha_{0, \cdots, 0} |t_1^0, \cdots, t_m^0\rangle \\
&+ e^{i\varphi_{1 \oplus_2 l_1 \oplus_3 l_2 \oplus_4 \cdots \oplus_M l_{M-1}}} \alpha_{0, \cdots, 1} |t_1^1, \cdots, t_m^1\rangle + \cdots \\
&+ e^{i\varphi_{(M-1) \oplus_M l_{M-1}}} \alpha_{d-1, \cdots, d-1} |t_1^{M-1}, \cdots, t_m^{M-1}\rangle.
\end{aligned} \tag{36}$$

The state of particles $A_{11}, \cdots, C_{mz}, b_1, \cdots, b_m$ can be written as:

$$\begin{aligned}
|\Phi\rangle &= |\phi\rangle_{A_{11},\cdots,C_{mz}} \otimes |\psi\rangle_{b_1,\cdots,b_m} \\
&= \sum_{\substack{j_{11},j_{12},\cdots,j_{m1},\\ j_{m2},l_1,\cdots,l_m=0}}^{d-1} e^{\frac{2\pi i}{d} j_{11}j_{12}} \cdots e^{\frac{2\pi i}{d} j_{m1}j_{m2}} \alpha_{l_1,\cdots,l_m} \\
&\quad |j_{11},\cdots,j_{11}\rangle_{A_{11},\cdots,A_{1n}} |j_{11},\cdots,j_{11}\rangle_{B_{11},\cdots,B_{1y}} \\
&\quad |j_{12},\cdots,j_{12}\rangle_{C_{11},\cdots,C_{1z}} \cdots \\
&\quad |j_{m1},\cdots,j_{m1}\rangle_{A_{m1},\cdots,A_{mn}} |j_{m1},\cdots,j_{m1}\rangle_{B_{m1},\cdots,B_{my}} \\
&\quad |j_{m2},\cdots,j_{m2}\rangle_{C_{m1},\cdots,C_{mz}} |l_1,\cdots,l_m\rangle_{b_1,\cdots,b_m}.
\end{aligned} \tag{37}$$

For the hierarchical joint remote implementation of the partially unknown operations, Bob_1 performs m C-NOT operations on qudit b_v and B_{v1} $(v = 1, \cdots, m)$ by using qudit B_{v1} as the control qudit. The state of particles $A_{11}, \cdots, C_{mz}, b_1, \cdots, b_m$ becomes $|\Phi_1\rangle$ after the C-NOT operations.

$$\begin{aligned}
|\Phi_1\rangle &= |\phi\rangle_{A_{11},\cdots,C_{mz}} \otimes |\psi\rangle_{b_1,\cdots,b_m} \\
&= \sum_{\substack{j_{11},j_{12},\cdots,j_{m1},\\ j_{m2},l_1,\cdots,l_m=0}}^{d-1} e^{\frac{2\pi i}{d} j_{11}j_{12}} \cdots e^{\frac{2\pi i}{d} j_{m1}j_{m2}} \alpha_{l_1,\cdots,l_m} \\
&\quad |j_{11},\cdots,j_{11}\rangle_{A_{11},\cdots,A_{1n}} |j_{11},\cdots,j_{11}\rangle_{B_{11},\cdots,B_{1y}} \\
&\quad |j_{12},\cdots,j_{12}\rangle_{C_{11},\cdots,C_{1z}} \cdots \\
&\quad |j_{m1},\cdots,j_{m1}\rangle_{A_{m1},\cdots,A_{mn}} |j_{m1},\cdots,j_{m1}\rangle_{B_{m1},\cdots,B_{my}} \\
&\quad |j_{m2},\cdots,j_{m2}\rangle_{C_{m1},\cdots,C_{mz}} \\
&\quad |l_1 \oplus_d j_{11},\cdots,l_m \oplus_d j_{m1}\rangle_{b_1,\cdots,b_m}.
\end{aligned} \tag{38}$$

After the C-NOT operations, Bob_1 performs a Z-basis measurement on particles on qudit b_v $(v = 1, \cdots, m)$. The state of particles $A_{11}, \cdots, C_{mz}$ becomes $|\phi_1\rangle$ if the measurement results are $t_1, \cdots, t_m$ $(t_1, \cdots, t_m = 0, \cdots, d-1)$.

$$\begin{aligned}
|\phi_1\rangle &= \sum_{\substack{j_{11},j_{12},\cdots,\\ j_{m1},j_{m2}=0}}^{d-1} e^{\frac{2\pi i}{d} j_{11}j_{12}} \cdots e^{\frac{2\pi i}{d} j_{m1}j_{m2}} \\
&\quad \alpha_{t_1 \oplus_d (d-j_{11}),\cdots,t_m \oplus_d (d-j_{m1})} \\
&\quad |j_{11},\cdots,j_{11}\rangle_{A_{11},\cdots,A_{1n}} |j_{11},\cdots,j_{11}\rangle_{B_{11},\cdots,B_{1y}} \\
&\quad |j_{12},\cdots,j_{12}\rangle_{C_{11},\cdots,C_{1z}} \cdots \\
&\quad |j_{m1},\cdots,j_{m1}\rangle_{A_{m1},\cdots,A_{mn}} |j_{m1},\cdots,j_{m1}\rangle_{B_{m1},\cdots,B_{my}} \\
&\quad |j_{m2},\cdots,j_{m2}\rangle_{C_{m1},\cdots,C_{mz}}.
\end{aligned} \tag{39}$$

Similar to the case for the hierarchical joint remote implementation of partially unknown operations of one qudit, $Alice_u$ $(u = 1, \cdots, n)$ first performs a single-qudit operation $X_{t_1}, \cdots, X_{t_m}$ on particles $A_{1u}, \cdots, A_{mu}$ according to Bob_1's measurement results $t_1, \cdots, t_m$, and then applies the partially unknown operation $U_{l_1,l_2,\cdots,l_M}(\varphi_{u,0}, \cdots, \varphi_{u,M-1})$ on its particles $A_{1u}, \cdots, A_{mu}$ in accordance with its knowledge of $\varphi_{u,0}, \cdots, \varphi_{u,M-1}$ and perform X-basis measurements on particles $A_{1u}, \cdots, A_{mu}$. The state of particles $A_{11}, \cdots, C_{mz}$

becomes $|\phi_2\rangle$ after $Alice_u$ $(u = 1, \cdots, n)$ performs single-qudit operation $X_{t_1}, \cdots, X_{t_m}$ on its particles $A_{1u}, \cdots, A_{mu}$.

$$\begin{aligned}
|\phi_2\rangle \quad = \quad & \sum_{\substack{j_{11}, j_{12}, \cdots, \\ j_{m1}, j_{m2}=0}}^{d-1} e^{\frac{2\pi i}{d}(t_1 - j_{11})j_{12}} \cdots e^{\frac{2\pi i}{d}(t_m - j_{m1})j_{m2}} \\
& \alpha_{j_{11}, \cdots, j_{m1}} |j_{11}, \cdots, j_{11}\rangle_{A_{11}, \cdots, A_{1n}} \\
& |t_1 \oplus_d (d - j_{11}), \cdots, t_1 \oplus_d (d - j_{11})\rangle_{B_{11}, \cdots, B_{1y}} \\
& |j_{12}, \cdots, j_{12}\rangle_{C_{11}, \cdots, C_{1z}} \cdots |j_{m1}, \cdots, j_{m1}\rangle_{A_{m1}, \cdots, A_{mn}} \\
& |t_m \oplus_d (d - j_{m1}), \cdots, t_m \oplus_d (d - j_{m1})\rangle_{B_{m1}, \cdots, B_{my}} \\
& |j_{m2}, \cdots, j_{m2}\rangle_{C_{m1}, \cdots, C_{mz}}.
\end{aligned} \tag{40}$$

After performing a single-qudit operation $X_{t_1}, \cdots, X_{t_m}$ on particles $A_{1u}, \cdots, A_{mu}$ $(u = 1, \cdots, n)$, $Alice_u$ applies partially unknown operation $U_{l_1, l_2, \cdots, l_M}(\varphi_{u,0}, \cdots, \varphi_{u,M-1})$ on its particles $A_{1u}, \cdots, A_{mu}$. The state of particles $A_{11}, \cdots, C_{mz}$ becomes

$$\begin{aligned}
|\phi_3\rangle \quad = \quad & \sum_{j_{12}, \cdots, j_{m2}=0}^{d-1} |j_{12}, \cdots, j_{12}\rangle_{C_{11}, \cdots, C_{1z}} \cdots |j_{m2}, \cdots, j_{m2}\rangle_{C_{m1}, \cdots, C_{mz}} \\
& [\alpha_{0, \cdots, 0} e^{\frac{2\pi i}{d} t_1 j_{12}} \cdots e^{\frac{2\pi i}{d} t_m j_{m2}} e^{i\varphi_{1,0 \oplus_2 l_1 \cdots \oplus_M l_{M-1}}} \\
& |t_1^0, \cdots, t_m^0\rangle_{A_{11}, \cdots, A_{m1}} \cdots e^{i\varphi_{n,0 \oplus_2 l_1 \cdots \oplus_M l_{M-1}}} |t_1^0, \cdots, t_m^0\rangle_{A_{1n}, \cdots, A_{mn}} \\
& |t_1, \cdots, t_1\rangle_{B_{11}, \cdots, B_{1y}} \cdots |t_m, \cdots, t_m\rangle_{B_{m1}, \cdots, B_{my}} \\
+ \quad & \alpha_{0, \cdots, 1} e^{\frac{2\pi i}{d} t_1 j_{12}} \cdots e^{\frac{2\pi i}{d}(t_m + d - 1) j_{m2}} e^{i\varphi_{1,1 \oplus_2 l_1 \cdots \oplus_M l_{M-1}}} \\
& |t_1^1, \cdots, t_m^1\rangle_{A_{11}, \cdots, A_{m1}} \cdots e^{i\varphi_{n,1 \oplus_2 l_1 \cdots \oplus_M l_{M-1}}} |t_1^1, \cdots, t_m^1\rangle_{A_{1n}, \cdots, A_{mn}} \\
& |t_1, \cdots, t_1\rangle_{B_{11}, \cdots, B_{1y}} \cdots |t_m \oplus_d (d - 1), \cdots, t_m \oplus_d (d - 1)\rangle_{B_{m1}, \cdots, B_{my}} \\
+ \quad & \cdots \\
+ \quad & \alpha_{d-1, \cdots, d-1} e^{\frac{2\pi i}{d}(t_1 + 1) j_{12}} \cdots e^{\frac{2\pi i}{d}(t_m + 1) j_{m2}} e^{i\varphi_{1,(M-1) \oplus_M l_{M-1}}} \\
& |t_1^{M-1}, \cdots, t_m^{M-1}\rangle_{A_{11}, \cdots, A_{m1}} \cdots e^{i\varphi_{n,(M-1) \oplus_M l_{M-1}}} \\
& |t_1^{M-1}, \cdots, t_m^{M-1}\rangle_{A_{1n}, \cdots, A_{mn}} |t_1 \oplus_d 1, \cdots, t_1 \oplus_d 1\rangle_{B_{11}, \cdots, B_{1y}} \cdots \\
& |t_m \oplus_d 1, \cdots, t_m \oplus_d 1\rangle_{B_{m1}, \cdots, B_{my}}]. \\
= \quad & \sum_{j_{12}, \cdots, j_{m2}=0}^{d-1} |j_{12}, \cdots, j_{12}\rangle_{C_{11}, \cdots, C_{1z}} \cdots |j_{m2}, \cdots, j_{m2}\rangle_{C_{m1}, \cdots, C_{mz}} \\
& [\alpha_{0, \cdots, 0} e^{\frac{2\pi i}{d} t_1 j_{12}} \cdots e^{\frac{2\pi i}{d} t_m j_{m2}} e^{i\varphi_{0 \oplus_2 l_1 \cdots \oplus_M l_{M-1}}} \\
& |t_1^0, \cdots, t_m^0\rangle_{A_{11}, \cdots, A_{m1}} \cdots |t_1^0, \cdots, t_m^0\rangle_{A_{1n}, \cdots, A_{mn}} \\
& |t_1, \cdots, t_1\rangle_{B_{11}, \cdots, B_{1y}} \cdots |t_m, \cdots, t_m\rangle_{B_{m1}, \cdots, B_{my}} \\
+ \quad & \alpha_{0, \cdots, 1} e^{\frac{2\pi i}{d} t_1 j_{12}} \cdots e^{\frac{2\pi i}{d}(t_m + d - 1) j_{m2}} e^{i\varphi_{1 \oplus_2 l_1 \cdots \oplus_M l_{M-1}}} \\
& |t_1^1, \cdots, t_m^1\rangle_{A_{11}, \cdots, A_{m1}} \cdots |t_1^1, \cdots, t_m^1\rangle_{A_{1n}, \cdots, A_{mn}} \\
& |t_1, \cdots, t_1\rangle_{B_{11}, \cdots, B_{1y}} \cdots |t_m \oplus_d (d - 1), \cdots, t_m \oplus_d (d - 1)\rangle_{B_{m1}, \cdots, B_{my}} \\
+ \quad & \cdots \\
+ \quad & \alpha_{d-1, \cdots, d-1} e^{\frac{2\pi i}{d}(t_1 + 1) j_{12}} \cdots e^{\frac{2\pi i}{d}(t_m + 1) j_{m2}} e^{i\varphi_{(M-1) \oplus_M l_{M-1}}} \\
& |t_1^{M-1}, \cdots, t_m^{M-1}\rangle_{A_{11}, \cdots, A_{m1}} \cdots |t_1^{M-1}, \cdots, t_m^{M-1}\rangle_{A_{1n}, \cdots, A_{mn}} \\
& |t_1 \oplus_d 1, \cdots, t_1 \oplus_d 1\rangle_{B_{11}, \cdots, B_{1y}} \cdots |t_m \oplus_d 1, \cdots, t_m \oplus_d 1\rangle_{B_{m1}, \cdots, B_{my}}].
\end{aligned} \tag{41}$$

To implement the partially unknown operations remotely, $Alice_u$ performs X-basis measurements on its particles $A_{1u}, \cdots, A_{mu}$. The state of particles $A_{11}, \cdots, C_{mz}$ can be rewritten as:

$$\begin{aligned}
|\phi_3\rangle \quad = \quad & \sum_{\substack{r_{11},\cdots,r_{mn},\\ j_{12},\cdots,j_{m2}=0}}^{d-1} |j_{12},\cdots,j_{12}\rangle_{C_{11},\cdots,C_{1z}} \cdots |j_{m2},\cdots,j_{m2}\rangle_{C_{m1},\cdots,C_{mz}} \\
& [\alpha_{0,\cdots,0} e^{\frac{2\pi i}{d} t_1 j_{12}} \cdots e^{\frac{2\pi i}{d} t_m j_{m2}} e^{i\varphi_{0\oplus_2 l_1 \cdots \oplus_M l_{M-1}}} \\
& e^{-\frac{2\pi i}{d}(r_{11}+\cdots r_{1n})t_1^0} \cdots e^{-\frac{2\pi i}{d}(r_{m1}+\cdots r_{mn})t_m^0} \\
& |r_{11}\rangle_x, \cdots, |r_{m1}\rangle_x, \cdots, |r_{1n}\rangle_x, \cdots, |r_{mn}\rangle_x \\
& |t_1,\cdots,t_1\rangle \cdots |t_m,\cdots,t_m\rangle \\
+ \quad & \alpha_{0,\cdots,1} e^{\frac{2\pi i}{d} t_1 j_{12}} \cdots e^{\frac{2\pi i}{d}(t_m+d-1) j_{m2}} e^{i\varphi_{1\oplus_2 l_1 \cdots \oplus_M l_{M-1}}} \rangle \\
& e^{-\frac{2\pi i}{d}(r_{11}+\cdots r_{1n})t_1^1} \cdots e^{-\frac{2\pi i}{d}(r_{m1}+\cdots r_{mn})t_m^1} \\
& |r_{11}\rangle_x, \cdots, |r_{m1}\rangle_x, \cdots, |r_{1n}\rangle_x, \cdots, |r_{mn}\rangle_x \\
& |t_1,\cdots,t_1\rangle \cdots |t_m \oplus_d (d-1),\cdots,t_m \oplus_d (d-1)\rangle \\
+ \quad & \cdots \\
+ \quad & \alpha_{d-1,\cdots,d-1} e^{\frac{2\pi i}{d}(t_1+1) j_{12}} \cdots e^{\frac{2\pi i}{d}(t_m+1) j_{m2}} \\
& e^{i\varphi_{(M-1)\oplus_M l_{M-1}}} e^{-\frac{2\pi i}{d}(r_{11}+\cdots r_{1n})t_1^{M-1}} \\
& \cdots e^{-\frac{2\pi i}{d}(r_{m1}+\cdots r_{mn})t_m^{M-1}} |r_{11}\rangle_x, \cdots, |r_{m1}\rangle_x, \cdots, \\
& |r_{1n}\rangle_x, \cdots, |r_{mn}\rangle_x |t_1 \oplus_d 1\rangle \otimes \cdots \otimes \\
& |t_1 \oplus_d 1\rangle \cdots |t_m \oplus_d 1\rangle \otimes \cdots \otimes \\
& |t_m \oplus_d 1\rangle]_{A_{11}\cdots A_{m1}\cdots A_{1n}\cdots A_{mn} B_{11}\cdots B_{1y}\cdots B_{m1}\cdots B_{my}}.
\end{aligned} \tag{42}$$

The state of particles $B_{11}, \cdots, C_{mz}$ becomes $|\phi_4\rangle$ if the measurement results obtained by $Alice_u (u = 1, \cdots, n)$ are $|r_{1u}\rangle_x, \cdots, |r_{mu}\rangle_x$.

$$\begin{aligned}
|\phi_4\rangle \quad = \quad & \sum_{j_{12},\cdots,j_{m2}=0}^{d-1} |j_{12},\cdots,j_{12}\rangle_{C_{11},\cdots,C_{1z}} \cdots |j_{m2},\cdots,j_{m2}\rangle_{C_{m1},\cdots,C_{mz}} \\
& [\alpha_{0,\cdots,0} e^{\frac{2\pi i}{d} t_1 j_{12}} \cdots e^{\frac{2\pi i}{d} t_m j_{m2}} e^{i\varphi_{0\oplus_2 l_1 \cdots \oplus_M l_{M-1}}} \\
& e^{-\frac{2\pi i}{d} r_1 t_1^0} \cdots e^{-\frac{2\pi i}{d} r_m t_m^0} |t_1,\cdots,t_1\rangle \cdots |t_m,\cdots,t_m\rangle \\
+ \quad & \alpha_{0,\cdots,1} e^{\frac{2\pi i}{d} t_1 j_{12}} \cdots e^{\frac{2\pi i}{d}(t_m+d-1) j_{m2}} e^{i\varphi_{1\oplus_2 l_1 \cdots \oplus_M l_{M-1}}} \\
& e^{-\frac{2\pi i}{d} r_1 t_1^1} \cdots e^{-\frac{2\pi i}{d} r_m t_m^1} |t_1,\cdots,t_1\rangle \\
& \cdots |t_m \oplus_d (d-1),\cdots,t_m \oplus_d (d-1)\rangle + \cdots \\
+ \quad & \alpha_{d-1,\cdots,d-1} e^{\frac{2\pi i}{d}(t_1+1) j_{12}} \cdots e^{\frac{2\pi i}{d}(t_m+1) j_{m2}} \\
& e^{i\varphi_{(M-1)\oplus_M l_{M-1}}} e^{-\frac{2\pi i}{d} r_1 t_1^{M-1}} \cdots e^{-\frac{2\pi i}{d} r_m t_m^{M-1}} \\
& |t_1 \oplus_d 1\rangle \otimes \cdots \otimes |t_1 \oplus_d 1\rangle \cdots \\
& |t_m \oplus_d 1\rangle \otimes \cdots \otimes |t_m \oplus_d 1\rangle]_{B_{11}\cdots B_{1y}\cdots B_{m1}\cdots B_{my}},
\end{aligned} \tag{43}$$

where $r_v = r_{v1} + \cdots r_{vn}$ $(v = 1, \cdots, m)$.

Firstly, we suppose that the agents agree to reconstruct the desired state $|\psi'\rangle$ at the upper-grade agent Bob_k's $(k = 1, \cdots, y)$ site. The quantum circuit for the hierarchial joint remote implementation of partially unknown operations of m qudits with upper-grade agent is shown in Figure 3. To reconstruct the desired state at Bob_k's site, the lower-grade agent $Charlie_p$ $(p = 1, \cdots, z)$ performs Z-basis measurement on his qudits $C_{1p}, \cdots, C_{mp}$. The other upper-grade agents $Bob_1, \cdots, Bob_{k-1}, Bob_{k+1}, \cdots, Bob_y$ perform X-basis measurements on

their qudits $B_{11}, \cdots, B_{m1}, \cdots, Bob_{1,k-1}, \cdots, Bob_{m,k-1}, Bob_{1,k+1}, \cdots, Bob_{m,k+1}, \cdots, Bob_{1,y}, \cdots, Bob_{m,y}$. The receiver Bob_k can reconstruct the desired state by performing unitary operation on his qudits $Bob_{1,k}, \cdots, Bob_{m,k}$ according to other upper-grade agents' measurement results and one of the lower-grade agents' measurements.

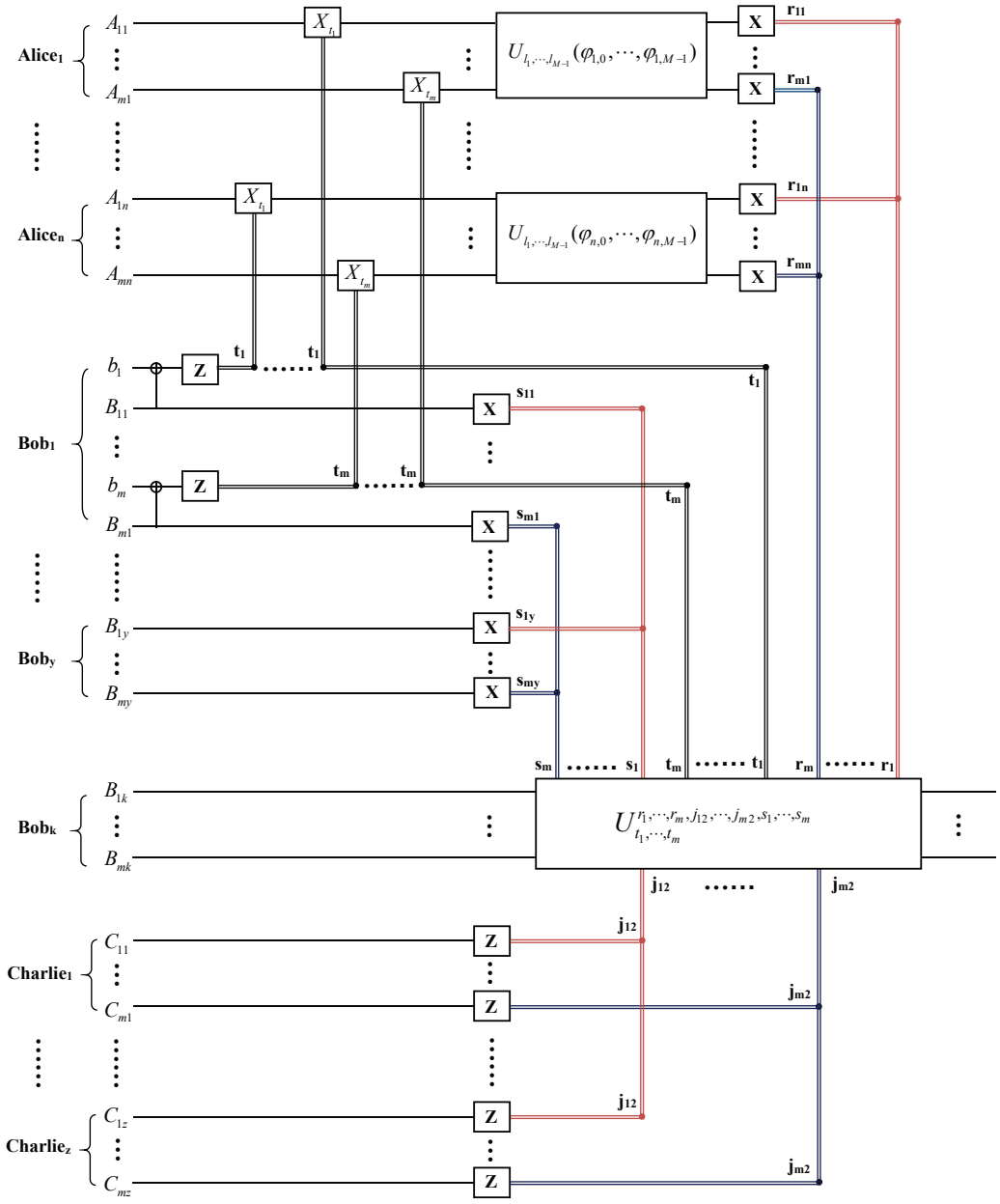

Figure 3. The quantum circuit for the hierarchial joint remote implementation of partially unknown operations of m qudits with upper-grade agent Bob_k. $U_{t_1,\cdots,t_m}^{r_1,\cdots,r_m,j_{12},\cdots,j_{m2},s_1,\cdots,s_m}$ in the solid-line box denotes the unitary operation performed by the receiver.

The state of particles $B_{11}, \cdots, B_{1y}, \cdots, B_{m1}, \cdots, B_{my}$ becomes $|\phi_5\rangle$ if the measurement results obtained by $Charlie_p$ are $|j_{12}\rangle_{C_{1p}}, \cdots, |j_{m2}\rangle_{C_{mp}}$.

$$\begin{aligned}
|\phi_5\rangle \quad = \quad & [\alpha_{0,\cdots,0} e^{\frac{2\pi i}{d} t_1 j_{12}} \cdots e^{\frac{2\pi i}{d} t_m j_{m2}} e^{i\varphi_{0\oplus_2 l_1 \cdots \oplus_M l_{M-1}}} \\
& e^{-\frac{2\pi i}{d} r_1 t_1^0} \cdots e^{-\frac{2\pi i}{d} r_m t_m^0} |t_1, \cdots, t_1\rangle \cdots |t_m, \cdots, t_m\rangle \\
+ \quad & \alpha_{0,\cdots,1} e^{\frac{2\pi i}{d} t_1 j_{12}} \cdots e^{\frac{2\pi i}{d} (t_m+d-1) j_{m2}} e^{i\varphi_{1\oplus_2 l_1 \cdots \oplus_M l_{M-1}}} \\
& e^{-\frac{2\pi i}{d} r_1 t_1^1} \cdots e^{-\frac{2\pi i}{d} r_m t_m^1} |t_1, \cdots, t_1\rangle \\
& \cdots |t_m \oplus_d (d-1), \cdots, t_m \oplus_d (d-1)\rangle + \cdots \\
+ \quad & \alpha_{d-1,\cdots,d-1} e^{\frac{2\pi i}{d} (t_1+1) j_{12}} \cdots e^{\frac{2\pi i}{d} (t_m+1) j_{m2}} \\
& e^{i\varphi_{(M-1)\oplus_M l_{M-1}}} e^{-\frac{2\pi i}{d} r_1 t_1^{M-1}} \cdots e^{-\frac{2\pi i}{d} r_m t_m^{M-1}} \\
& |t_1 \oplus_d 1\rangle \otimes \cdots \otimes |t_1 \oplus_d 1\rangle \cdots \\
& |t_m \oplus_d 1\rangle \otimes \cdots \otimes |t_m \oplus_d 1\rangle]_{B_{11} \cdots B_{1y} \cdots B_{m1} \cdots B_{my}}.
\end{aligned} \tag{44}$$

To hierarchically jointly remotely implement the partially unknown operations, the other upper-grade agents $Bob_1, \cdots, Bob_{k-1}, Bob_{k+1}, \cdots, Bob_y$ perform X-basis measurements on their qudits $B_{11}, \cdots, B_{m1}, \cdots, B_{1,k-1}, \cdots, B_{m,k-1}, B_{1,k+1}, \cdots, B_{m,k+1}, \cdots, B_{1,y}, \cdots, Bob_{m,y}$. The state of particles $B_{11}, \cdots, B_{1y}, \cdots, B_{m1}, \cdots, B_{my}$ can be rewritten as:

$$\begin{aligned}
|\phi_5\rangle \quad = \quad & \sum_{\substack{s_{11},\cdots,s_{1y},\cdots, \\ s_{m1},\cdots,s_{my}=0}}^{d-1} [\alpha_{0,\cdots,0} e^{\frac{2\pi i}{d} t_1 j_{12}} \cdots e^{\frac{2\pi i}{d} t_m j_{m2}} e^{i\varphi_{0\oplus_2 l_1 \cdots \oplus_M l_{M-1}}} \\
& e^{-\frac{2\pi i}{d} r_1 t_1^0} \cdots e^{-\frac{2\pi i}{d} r_m t_m^0} e^{-\frac{2\pi i}{d} s_1 t_1} \cdots e^{-\frac{2\pi i}{d} s_m t_m} \\
& |s_{11}\rangle_x \cdots |s_{1,k-1}\rangle_x |t_1\rangle |s_{1,k+1}\rangle_x \cdots |s_{1,y}\rangle_x \cdots \\
& |s_{m1}\rangle_x \cdots |s_{m,k-1}\rangle_x |t_m\rangle |s_{m,k+1}\rangle_x \cdots |s_{m,y}\rangle_x \\
+ \quad & \alpha_{0,\cdots,1} e^{\frac{2\pi i}{d} t_1 j_{12}} \cdots e^{\frac{2\pi i}{d} (t_m+d-1) j_{m2}} e^{i\varphi_{1\oplus_2 l_1 \cdots \oplus_M l_{M-1}}} \\
& e^{-\frac{2\pi i}{d} r_1 t_1^1} \cdots e^{-\frac{2\pi i}{d} r_m t_m^1} e^{-\frac{2\pi i}{d} s_1 t_1} \cdots e^{-\frac{2\pi i}{d} s_m (t_m+d-1)} \\
& |s_{11}\rangle_x \cdots |s_{1,k-1}\rangle_x |t_1\rangle |s_{1,k+1}\rangle_x \cdots |s_{1,y}\rangle_x \cdots \\
& |s_{m1}\rangle_x \cdots |s_{m,k-1}\rangle_x |t_m \oplus_d (d-1)\rangle |s_{m,k+1}\rangle_x \cdots |s_{m,y}\rangle_x + \cdots \\
+ \quad & \alpha_{d-1,\cdots,d-1} e^{\frac{2\pi i}{d} (t_1+1) j_{12}} \cdots e^{\frac{2\pi i}{d} (t_m+1) j_{m2}} e^{i\varphi_{(M-1)\oplus_M l_{M-1}}} \\
& e^{-\frac{2\pi i}{d} r_1 t_1^{M-1}} \cdots e^{-\frac{2\pi i}{d} r_m t_m^{M-1}} e^{-\frac{2\pi i}{d} s_1 (t_1+1)} \cdots e^{-\frac{2\pi i}{d} s_m (t_m+1)} \\
& |s_{11}\rangle_x \cdots |s_{1,k-1}\rangle_x |t_1 \oplus_d 1\rangle |s_{1,k+1}\rangle_x \cdots |s_{1,y}\rangle_x \cdots \\
& |s_{m1}\rangle_x \cdots |s_{m,k-1}\rangle_x |t_m \oplus_d 1\rangle |s_{m,k+1}\rangle_x \cdots |s_{m,y}\rangle_x]_{B_{11} \cdots B_{1y} \cdots B_{m1} \cdots B_{my}},
\end{aligned} \tag{45}$$

where $s_v = s_{v1} + \cdots + s_{v,k-1} + s_{v,k+1} + \cdots + s_{vy}$ $(v = 1, \cdots, m)$.

The state of particles $B_{1k}, \cdots, B_{mk}$ becomes $|\phi_6\rangle$ if the measurement results obtained by $Bob_1, \cdots, Bob_{k-1}, Bob_{k+1}, \cdots, Bob_y$ are $s_{11}, \cdots, s_{m1}, \cdots, s_{1,k-1}, \cdots, s_{m,k-1}, \cdots, s_{1,k+1}, \cdots, s_{m,k+1}, \cdots, s_{1y}, \cdots, s_{my}$.

$$\begin{aligned}
|\phi_6\rangle &= [\alpha_{0,\cdots,0} e^{\frac{2\pi i}{d} t_1 j_{12}} \cdots e^{\frac{2\pi i}{d} t_m j_{m2}} e^{i\varphi_{0\oplus_2 l_1 \cdots \oplus_M l_{M-1}}} \\
&\quad e^{-\frac{2\pi i}{d} r_1 t_1^0} \cdots e^{-\frac{2\pi i}{d} r_m t_m^0} e^{-\frac{2\pi i}{d} s_1 t_1} \cdots e^{-\frac{2\pi i}{d} s_m t_m} |t_1\rangle \cdots |t_m\rangle \\
&+ \alpha_{0,\cdots,1} e^{\frac{2\pi i}{d} t_1 j_{12}} \cdots e^{\frac{2\pi i}{d} (t_m+d-1) j_{m2}} e^{i\varphi_{1\oplus_2 l_1 \cdots \oplus_M l_{M-1}}} \\
&\quad e^{-\frac{2\pi i}{d} r_1 t_1^1} \cdots e^{-\frac{2\pi i}{d} r_m t_m^1} e^{-\frac{2\pi i}{d} s_1 t_1} \cdots e^{-\frac{2\pi i}{d} s_m (t_m+d-1)} \\
&\quad |t_1\rangle \cdots |t_m \oplus_d (d-1)\rangle + \cdots \\
&+ \alpha_{d-1,\cdots,d-1} e^{\frac{2\pi i}{d} (t_1+1) j_{12}} \cdots e^{\frac{2\pi i}{d} (t_m+1) j_{m2}} e^{i\varphi_{(M-1)\oplus_M l_{M-1}}} \\
&\quad e^{-\frac{2\pi i}{d} r_1 t_1^{M-1}} \cdots e^{-\frac{2\pi i}{d} r_m t_m^{M-1}} e^{-\frac{2\pi i}{d} s_1 (t_1+1)} \cdots e^{-\frac{2\pi i}{d} s_m (t_m+1)} \\
&\quad |t_1 \oplus_d 1\rangle \cdots |t_m \oplus_d 1\rangle]_{B_{1k} \cdots B_{mk}}.
\end{aligned} \tag{46}$$

Similar to the case for remote implementation of partially unknown operations of one qudit, the m-qudit operation

$$\begin{aligned}
&U_{t_1,\cdots,t_m}^{r_1,\cdots,r_m,j_{12},\cdots,j_{m2},s_1,\cdots,s_m} \\
=\ & e^{\frac{2\pi i}{d} t_1 (s_1 - j_{12})} \cdots e^{\frac{2\pi i}{d} t_m (s_m - j_{m2})} e^{\frac{2\pi i}{d} r_1 t_1^0} \cdots e^{-\frac{2\pi i}{d} r_m t_m^0} \\
& |t_1^0, \cdots, t_m^0\rangle \langle t_1, \cdots, t_m| \\
+\ & e^{\frac{2\pi i}{d} t_1 (s_1 - j_{12})} \cdots e^{\frac{2\pi i}{d} (t_m+d-1)(s_m - j_{m2})} e^{\frac{2\pi i}{d} r_1 t_1^1} \cdots e^{\frac{2\pi i}{d} r_m t_m^1} \\
& |t_1^1, \cdots, t_m^1\rangle \langle t_1, \cdots, t_m \oplus_d (d-1)| + \cdots \\
+\ & e^{\frac{2\pi i}{d} (t_1+1)(s_1 - j_{12})} \cdots e^{\frac{2\pi i}{d} (t_m+1)(s_m - j_{m2})} e^{\frac{2\pi i}{d} r_1 t_1^{M-1}} \cdots e^{\frac{2\pi i}{d} r_m t_m^{M-1}} \\
& |t_1^{M-1}, \cdots, t_m^{M-1}\rangle \langle t_1 \oplus_d 1, \cdots, t_m \oplus_d 1|,
\end{aligned} \tag{47}$$

in accordance with Bob_1's measurement results $t_1, \cdots, t_m$, the senders' measurement results $r_1, \cdots, r_m$, the lower-grade agents' measurement results $j_{12}, \cdots, j_{m2}$ and the upper-grade agents' measurement results $s_1, \cdots, s_m$ can reconstruct the desired state at Bob_k's site.

$$(U_{t_1,\cdots,t_m}^{r_1,\cdots,r_m,j_{12},\cdots,j_{m2},s_1,\cdots,s_m})_{B_{1k},\cdots,B_{mk}} |\phi_6\rangle = |\psi'\rangle. \tag{48}$$

Now, we discuss another case in which the agents agree to reconstruct the desired state $|\psi'\rangle$ at $Charlie_p$'s site $(p = 1, \cdots, z)$. The quantum circuit for the hierarchial joint remote implementation of partially unknown operations of m qudits with lower-grade agent is shown in Figure 4. To reconstruct the desired state at the lower-grade agent $Charlie_p$'s site, the other lower-grade agents $Charlie_1, \cdots, Charlie_{p-1}, Charlie_{p+1}, \cdots, Charlie_z$ and the upper-grade agents $Bob_1, \cdots, Bob_y$ perform x-basis measurements on their entangled particles $C_{11}, \cdots, C_{m1}, \cdots, C_{p-1,1}, \cdots, C_{p-1,m}, C_{p+1,1}, \cdots, C_{p+1,m}, C_{1z}, \cdots, C_{mz}$ and $B_1, \cdots, B_y$, after $Alice_u$ $(l = u, \cdots, n)$ implements partially unknown operation $U_{l_1,l_2,\cdots,l_{d-1}}(\varphi_{l,0}, \varphi_{l,1}, \cdots, \varphi_{l,d-1})$ and performs x-basis measurements on its qudit A_u. The state $|\phi_4\rangle$ can be rewritten as:

$$
\begin{aligned}
|\phi_4\rangle \quad = \quad & \sum_{\substack{j_{12},\cdots,j_{m2},s_{11},\cdots,\\ s_{my},q_{11},\cdots,q_{mz}=0}}^{d-1} e^{-\frac{2\pi i}{d} j_{12} q_1} \ldots e^{-\frac{2\pi i}{d} j_{m2} q_m} \\
& |q_{11}\rangle_x, \cdots, |q_{1,p-1}\rangle_x |j_{12}\rangle |q_{1,p+1}\rangle_x \cdots |q_{1,z}\rangle_x \cdots \\
& |q_{m1}\rangle_x, \cdots, |q_{m,p-1}\rangle_x |j_{m2}\rangle |q_{m,p+1}\rangle_x \cdots |q_{m,z}\rangle_x \\
& [\alpha_{0,\cdots,0} e^{\frac{2\pi i}{d} t_1 j_{12}} \ldots e^{\frac{2\pi i}{d} t_m j_{m2}} e^{i\varphi_{0\oplus_2 l_1 \cdots \oplus_M l_{M-1}}} \\
& e^{-\frac{2\pi i}{d} r_1 t_1^0} \ldots e^{-\frac{2\pi i}{d} r_m t_m^0} e^{-\frac{2\pi i}{d} s_1 t_1} \ldots e^{-\frac{2\pi i}{d} s_m t_m} \\
+ \quad & \alpha_{0,\cdots,1} e^{\frac{2\pi i}{d} t_1 j_{12}} \ldots e^{\frac{2\pi i}{d} (t_m+d-1) j_{m2}} \\
& e^{i\varphi_{1\oplus_2 l_1 \cdots \oplus_M l_{M-1}}} e^{-\frac{2\pi i}{d} r_1 t_1^1} \ldots e^{-\frac{2\pi i}{d} r_m t_m^1} \\
& e^{-\frac{2\pi i}{d} s_1 t_1} \ldots e^{-\frac{2\pi i}{d} s_m (t_m+d-1)} + \cdots \\
+ \quad & \alpha_{d-1,\cdots,d-1} e^{\frac{2\pi i}{d} (t_1+1) j_{12}} \ldots \; e^{\frac{2\pi i}{d} (t_m+1) j_{m2}} \\
& e^{i\varphi_{(M-1)\oplus_M l_{M-1}}} e^{-\frac{2\pi i}{d} r_1 t_1^{M-1}} \ldots e^{-\frac{2\pi i}{d} r_m t_m^{M-1}} \\
& e^{-\frac{2\pi i}{d} s_1 (t_1+1)} \ldots e^{-\frac{2\pi i}{d} s_m (t_m+1)}],
\end{aligned} \tag{49}
$$

where

$$
\begin{aligned}
q_v \quad &= \quad q_{v,1} + \cdots + q_{v,p-1} + q_{v,p+1} + \cdots + q_{v,z}, \\
s_v \quad &= \quad s_{v,1} + \cdots + s_{v,y}.
\end{aligned} \tag{50}
$$

The state of particles $C_{1p}, \cdots, C_{mp}$ becomes $|\omega\rangle$ if the measurement results are obtained by $Charlie_1, \cdots, Charlie_{p-1}, Charlie_{p+1}, \cdots, Charlie_z$ are $q_{11}, \cdots, q_{m1}, \cdots, q_{1,p-1}, \cdots, q_{m,p-1}, q_{1,p+1}, \cdots, q_{m,p+1}, \cdots, q_{1z}, \cdots, q_{mz}$.

$$
\begin{aligned}
|\omega\rangle \quad = \quad & \alpha_{0,\cdots,0} e^{i\varphi_{0\oplus_2 l_1 \cdots \oplus_M l_{M-1}}} e^{-\frac{2\pi i}{d} r_1 t_1^0} \ldots e^{-\frac{2\pi i}{d} r_m t_m^0} \\
& e^{-\frac{2\pi i}{d} s_1 t_1} \ldots e^{-\frac{2\pi i}{d} s_m t_m} [(\sum_{j_{12}=0}^{d-1} e^{\frac{2\pi i}{d} j_{12} (t_1 - q_1)} \\
& |j_{12}\rangle) \cdots (\sum_{j_{m2}=0}^{d-1} e^{\frac{2\pi i}{d} j_{m2} (t_m - q_m)} |j_{m2}\rangle)] \\
+ \quad & \alpha_{0,\cdots,1} e^{i\varphi_{1\oplus_2 l_1 \cdots \oplus_M l_{M-1}}} e^{-\frac{2\pi i}{d} r_1 t_1^1} \ldots e^{-\frac{2\pi i}{d} r_m t_m^1} \\
& e^{-\frac{2\pi i}{d} s_1 t_1} \ldots e^{-\frac{2\pi i}{d} s_m (t_m+d-1)} [(\sum_{j_{12}=0}^{d-1} e^{\frac{2\pi i}{d} j_{12} (t_1 - q_1)} \\
& |j_{12}\rangle) \cdots (\sum_{j_{m2}=0}^{d-1} e^{\frac{2\pi i}{d} j_{m2} (t_m+d-1-q_m)} |j_{m2}\rangle)] + \cdots \\
+ \quad & \alpha_{d-1,\cdots,d-1} e^{i\varphi_{(M-1)\oplus_M l_{M-1}}} e^{-\frac{2\pi i}{d} r_1 t_1^{M-1}} \ldots \\
& e^{-\frac{2\pi i}{d} r_m t_m^{M-1}} e^{-\frac{2\pi i}{d} s_1 (t_1+1)} \ldots e^{-\frac{2\pi i}{d} s_m (t_m+1)} \\
& [(\sum_{j_{12}=0}^{d-1} e^{\frac{2\pi i}{d} (t_1+1-q_1) j_{12}} |j_{12}\rangle) \cdots \\
& (\sum_{j_{m2}=0}^{d-1} e^{\frac{2\pi i}{d} (t_m+1-q_m) j_{m2}} |j_{m2}\rangle)].
\end{aligned} \tag{51}
$$

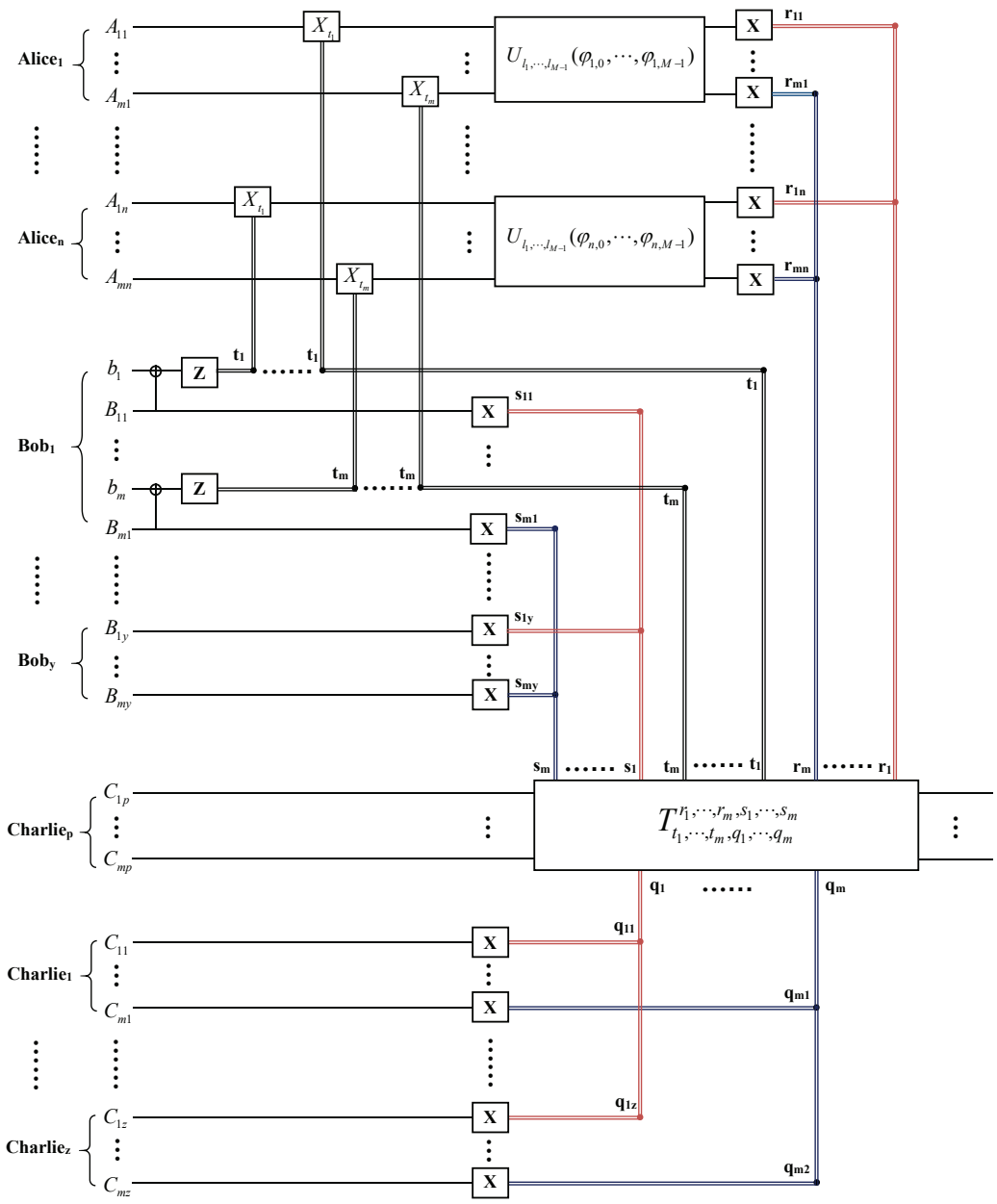

Figure 4. The quantum circuit for the hierarchial joint remote implementation of partially unknown operations of m qudits with lower-grade agent $Charlie_p$.

To reconstruct the desired state, $Charlie_p$ first performs the inverse Hadamard operations on its qudits $C_{1p}, \cdots, C_{mp}$ and then performs corresponding unitary operation on its qudits according to all the other agents' measurement results. After $Charlie_p$ performs m inverse Hadamard operations on its qudits $C_{1p}, \cdots, C_{mp}$, the state of particles $C_{1p}, \cdots, C_{mp}$ becomes:

$$
\begin{aligned}
|\omega_1\rangle &= \alpha_{0,\cdots,0} e^{i\varphi_{0\oplus_2 l_1\cdots\oplus_M l_{M-1}}} e^{-\frac{2\pi i}{d} r_1 t_1^0} \cdots e^{-\frac{2\pi i}{d} r_m t_m^0} \\
&\quad e^{-\frac{2\pi i}{d} s_1 t_1} \cdots e^{-\frac{2\pi i}{d} s_m t_m} [|t_1 \oplus_d (d-q_1)\rangle \\
&\quad \cdots |t_m \oplus_d (d-q_m)\rangle]_{C_{1p},\cdots,C_{mp}} \\
&+ \alpha_{0,\cdots,1} e^{i\varphi_{1\oplus_2 l_1\cdots\oplus_M l_{M-1}}} e^{-\frac{2\pi i}{d} r_1 t_1^1} \cdots e^{-\frac{2\pi i}{d} r_m t_m^1} \\
&\quad e^{-\frac{2\pi i}{d} s_1 t_1} \cdots e^{-\frac{2\pi i}{d} s_m (t_m+d-1)} [|t_1 \oplus_d (d-q_1)\rangle \\
&\quad \cdots |t_m \oplus_d (d-1-q_m)\rangle]_{C_{1p},\cdots,C_{mp}} + \cdots \\
&+ \alpha_{d-1,\cdots,d-1} e^{i\varphi_{(M-1)\oplus_M l_{M-1}}} e^{-\frac{2\pi i}{d} r_1 t_1^{M-1}} \cdots \\
&\quad e^{-\frac{2\pi i}{d} r_m t_m^{M-1}} e^{-\frac{2\pi i}{d} s_1 (t_1+1)} \cdots e^{-\frac{2\pi i}{d} s_m (t_m+1)} \\
&\quad [|t_1 \oplus_d (1-q_1)\rangle \cdots |t_m \oplus_d (d-q_m)\rangle]_{C_{1p},\cdots,C_{mp}}.
\end{aligned} \tag{52}
$$

The m-qudit unitary operation

$$
\begin{aligned}
& T^{r_1,\cdots,r_m,s_1,\cdots,s_m}_{t_1,\cdots,t_m,q_1,\cdots,q_m} \\
= \; & e^{\frac{2\pi i}{d} r_1 t_1^0} \cdots e^{\frac{2\pi i}{d} r_m t_m^0} e^{\frac{2\pi i}{d} s_1 t_1} \cdots e^{\frac{2\pi i}{d} s_m t_m} \\
& |t_1^0, \cdots, t_m^0\rangle \langle t_1 \oplus_d (d-q_1), \cdots, t_m \oplus_d (d-q_m)| \\
+ \; & e^{\frac{2\pi i}{d} r_1 t_1^1} \cdots e^{\frac{2\pi i}{d} r_m t_m^1} e^{\frac{2\pi i}{d} s_1 t_1} \cdots e^{\frac{2\pi i}{d} s_m (t_m+d-1)} \\
& |t_1^1, \cdots, t_m^1\rangle \langle t_1 \oplus_d (d-q_1), \cdots, t_m \oplus_d (d-1-q_m)| \\
& + \cdots \\
+ \; & e^{\frac{2\pi i}{d} r_1 t_1^{M-1}} \cdots e^{\frac{2\pi i}{d} r_m t_m^{M-1}} e^{\frac{2\pi i}{d} s_1 (t_1+1)} \cdots e^{\frac{2\pi i}{d} s_m (t_m+1)} \\
& |t_1^{M-1}, \cdots, t_m^{M-1}\rangle \langle t_1 \oplus_d (1-q_1), \cdots, t_m \oplus_d (d-q_m)|,
\end{aligned} \tag{53}
$$

in accordance with the measurement results $t_1, \cdots, t_m$, $q_1, \cdots, q_m, r_1, \cdots, r_m, s_1, \cdots, s_m$ obtained by the other agents can reconstruct the desired state $|\psi'\rangle$ at $Charlie_p$'s site.

$$
T^{r_1,\cdots,r_m,s_1,\cdots,s_m}_{t_1,\cdots,t_m,q_1,\cdots,q_m} |\omega_1\rangle_{C_{1p},\cdots,C_{mp}} = |\psi'\rangle. \tag{54}
$$

Similar to the case for remotely implementing partially unknown operations of one qudit, the protocol for the remote implementation of partially unknown operations of m qudits has the advantage of possessing a channel capacity by transmitting d^m coefficients $\varphi_0, \cdots, \varphi_{d^m-1}$ via m multiparticle entangled states. The protocol is more convenient in application, since partially unknown operations of m qudits can be remotely implemented with less resources than that in bidirectional teleportation. Similar to the case for remotely implementing partially unknown operations of m qubits, the protocol for the remote implementation of partially unknown operations of m qudits plays an important role in distributed quantum computation, since the partially unknown operations of m qudits are not reducible to the direct products of partially unknown operations of one qudit. Since high-dimensional multiphotonic operations have been experimentally realized with an ancilla state and quantum nondemolition measurements, and a high-dimensional multiqudit state has been demonstrated via photon's frequency degree of freedom, the protocol for the remote implementation of partially unknown operations of m qudits can be realized with current techniques [90].

4. Discussion and Summary

In Ref. [58],the two agents Alice and Bob can exploit the nonlocality of two-qubit entangled state to avoid the requirement that the receivers are hierarchized in accordance with their abilities to reconstruct the desired state in controlled remote implementation of the partially unknown operations of one qubit with multiparticle entangled state. However, when the protocol becomes a hierarchical controlled joint remote implementation of

partially unknown operations of m qudits, the approach in Ref. [58]. does not work. In contrast to Ref. [48], the information of the partially unknown operations to be remotely implemented is shared by the n senders and the receiver cannot reconstruct the desired state if it does not cooperate with all the senders. This result will enhance the security of quantum operation remote implementation in long-distance quantum communication.

In summary, we propose a scheme for the hierarchical joint remote implementation of partially unknown operations of m qudits belonging to restricted sets by using m multiparticle entangled states as the quantum channel. The n senders share the information of the partially unknown operations to be remotely implemented and perform quantum operations on their entangled particles according to their knowledge of the quantum operation to be remotely implemented. The lower-grade agents perform z-basis measurements if the agents agree to reconstruct the desired state at the upper-grade agent's site. The upper-grade agent needs only to cooperate with one of the lower-grade agents to reconstruct the desired state. The other agents perform x-basis measurements if the agents agree to reconstruct the desired state at the lower-grade agent's site. The lower-grade agent needs all the other agents' cooperation to reconstruct the desired state. This protocol has the advantage of having high channel capacity in long-distance quantum communication by using high-dimensional quantum entangled states as the quantum channel for joint implementing the partially unknown operations of m qudits.

Author Contributions: R.J. conceived the protocol; R.J. and Q.L. collected the related literatures and designed the protocol; Q.L. and P.Z. analyzed the data and wrote the manuscript. All authors have read and agreed to the published version of the manuscript.

Funding: This work was supported by the National Natural Science Foundation of China under Grant No. 62365002, Natural Science Foundation of Guangxi under Grant No. 2018JJA110112.

Data Availability Statement: Data is contained within the article.

Conflicts of Interest: The authors declare no conflict of interest.

References

1. Bennett, C.H.; Brassad, G. Quantum cryptography: Public key distribution and coin tossing. In Proceedings of the IEEE International Conference on Computers, Systems and Signal Processing, Bangalore, India, 9–12 December 1984; IEEE: New York, NY, USA, 1984; p. 175.
2. Ekert, A.K. Quantum cryptography based on Bells theorem. *Phys. Rev. Lett.* **1991**, *67*, 661. [CrossRef] [PubMed]
3. Guo, P.L.; Dong, C.; He, Y.; Jing, F.; He, W.T.; Ren, B.C.; Li, C.Y.; Deng, F.G. Efficient quantum key distribution against collective noise using polarization and transverse spatial mode of photons. *Opt. Express* **2020**, *28*, 4611. [CrossRef] [PubMed]
4. Kwek, L.C.; Cao, L.; Luo, W.; Wang, Y.X.; Sun, S.H.; Wang, X.B.; Liu, A.Q. Chip-based quantum key distribution. *AAPPS Bull.* **2021**, *31*, 15. [CrossRef]
5. Liu, B.; Xia, S.; Xiao, D.; Huang, W.; Xu, B.J.; Li, Y. Decoy-state method for quantum-key-distribution-based quantum private query. *Sci. China-Phys. Mech. Astron.* **2022**, *65*, 240312. [CrossRef]
6. Li, Z.J.; Wei, K.J. Improving parameter optimization in decoy-state quantum key distribution. *Quantum Eng.* **2022**, *4*, 9717591. [CrossRef]
7. Wang, W.Y.; Wang, R.; Hu, C.Q.; Zapatero, V.; Qian, L.; Qi, B.; Curty, M.; Lo, H.K. Fully passive quantum key distribution. *Phys. Rev. Lett.* **2023**, *130*, 220801. [CrossRef]
8. Li, W.; Zhang, L.K.; Tan, H.; Lu, Y.C.; Liao, S.K.; Huang, J.; Li, H.; Wang, Z.; Mao, H.K.; Yan, B.Z.; et al. High-rate quantum key distribution exceeding 110 Mb s^{-1}. *Nat. Photonics* **2023**, *17*, 416. [CrossRef]
9. Yin, H.L.; Chen, Z.B. Cost-efficient quantum access network boosts practical deployment of quantum key distribution network. *Sci. China-Phys. Mech. Astron.* **2024**, *67*, 240332. [CrossRef]
10. Long, G.L.; Liu, X.S. Theoretically efficient high-capacity quantum-key-distribution scheme. *Phys. Rev. A* **2002**, *65*, 032302. [CrossRef]
11. Deng, F.G.; Long, G.L.; Liu, X.S. Two-step quantum direct communication protocol using the Einstein-Podolsky-Rosen pair block. *Phys. Rev. A* **2003**, *68*, 042317. [CrossRef]
12. Hu, J.Y.; Yu, B.; Jing, M.Y.; Xiao, L.T.; Jia, S.T.; Qin, G.Q.; Long, G.L. Experimental quantum secure direct communication with single photons. *Light Sci. Appl.* **2016**, *5*, e16144. [CrossRef] [PubMed]
13. Zhang, W.; Ding, D.S.; Sheng, Y.B.; Zhou, L.; Shi, B.S.; Guo, G.C. Quantum secure direct communication with quantum memory. *Phys. Rev. Lett.* **2017**, *118*, 220501. [CrossRef] [PubMed]

14. Yang, Y.G.; Wang, Y.C.; Yang, Y.L.; Chen, X.B.; Li, D.; Zhou, Y.H.; Shi, W.M. Participant attack on the deterministic measurement-device-independent quantum secret sharing protocol. *Sci. China-Phys. Mech. Astron.* **2021**, *64*, 260321. [CrossRef]
15. Qi, Z.; Li, Y.; Huang, Y.; Feng, J.; Zheng, Y.; Chen, X. A 15-user quantum secure direct communication network. *Light Sci. Appl.* **2021**, *10*, 183. [CrossRef]
16. Long, G.L.; Zhang, H.R. Drastic increase of channel capacity in quantum secure direct communication using masking. *Sci. Bull.* **2021**, *66*, 1267. [CrossRef] [PubMed]
17. Zhou, L.; Sheng, Y.B. One-step device-independent quantum secure direct communication. *Sci. China-Phys. Mech. Astron.* **2022**, *65*, 250311. [CrossRef]
18. Liu, X.; Luo, D.; Lin, G.S.; Chen, Z.H.; Huang, C.F.; Li, S.Z.; Zhang, C.X.; Zhang, Z.R.; Wei, K.J. Fiber-based quantum secure direct communication without active polarization compensation. *Sci. China-Phys. Mech. Astron.* **2022**, *65*, 120311. [CrossRef]
19. Sheng, Y.B.; Zhou, L.; Long, G.L. One-step quantum secure direct communication. *Sci. Bull.* **2022**, *67*, 367. [CrossRef] [PubMed]
20. Zhou, L.; Xu, B.W.; Zhong, W.; Sheng, Y.B. Device-independent quantum secure direct communication with single-photon sources. *Phys. Rev. Appl.* **2023**, *19*, 014306. [CrossRef]
21. Bennett, C.H.; Brassard, G.; Crépeau, C.; Jozsa, R.; Peres, A.; Wootters, W.K. Teleporting an unknown quantum state via dual classical and Einstein-Podolsky-Rosen channels. *Phys. Rev. Lett.* **1993**, *70*, 1895. [CrossRef]
22. Bouwmeester, D.; Pan, J.W.; Mattle, K.; Eibl, M.; Weinfurter, H.; Zeilinger, A. Experimental quantum teleportation. *Nature* **1997**, *390*, 575. [CrossRef]
23. Furusawa, A.; Sϕrensen, J.L.; Braunstein, S.L.; Fuchs, C.A.; Kimble, H.J.; Polzik, E.S. Unconditional quantum teleportation. *Science* **1998**, *282*, 706. [CrossRef]
24. Xiao, X.; Yao, Y.; Zhong, W.J.; Li, Y.L.; Xie, Y.M. Enhancing teleportation of quantum Fisher information by partial measurements. *Phys. Rev. A* **2016**, *93*, 012307. [CrossRef]
25. Langenfeld, S.; Welte, S.; Hartung, L.; Daiss, S.; Thomas, P.; Morin, O.; Distante, E.; Rempe, G. Quantum teleportation between remote qubit memories with only a single photon as a resource. *Phys. Rev. Lett.* **2021**, *126*, 130502. [CrossRef] [PubMed]
26. Hermans, S.L.N.; Pompili, M.; Beukers, H.K.C.; Baier, S.; Borregaard, J.; Hanson, R. Qubit teleportation between non-neighbouring nodes in a quantum network. *Nature* **2022**, *605*, 663. [CrossRef]
27. Shen, S.; Yuan, C.Z.; Zhang, Z.C.; Yu, H.; Zhang, R.M.; Yang, C.R.; Li, H.; Wang, Z.; Wang, Y.; Deng, G.W.; et al. Hertz-rate metropolitan quantum teleportation. *Light Sci. Appl.* **2023**, *12*, 115. [CrossRef]
28. Liu, S.S.; Lv, Y.H.; Wang, X.T.; Wang, J.B.; Lou, Y.B.; Jing, J.T. Deterministic all-optical quantum teleportation of four degrees of freedom. *Phys. Rev. Lett.* **2024**, *132*, 100801. [CrossRef]
29. Lo, H.K. Classical-communication cost in distributed quantum-information processing: A generalization of quantum-communication complexity. *Phys. Rev. A* **2000**, *62*, 012313. [CrossRef]
30. Pati, A.K. Minimum classical bit for remote preparation and measurement of a qubit. *Phys. Rev. A* **2000**, *63*, 014302. [CrossRef]
31. Long, G.L.; Xiao, L. Parallel quantum computing in a single ensemble quantum computer. *Phys. Rev. A* **2004**, *69*, 052303. [CrossRef]
32. Feng, G.R.; Xu, G.F.; Long, G.L. Experimental realization of nonadiabatic holonomic quantum computation. *Phys. Rev. Lett.* **2013**, *110*, 190501. [CrossRef] [PubMed]
33. Ren, B.C.; Wang, G.Y.; Feng, G.R. Universal hyperparallel hybrid photonic quantum gates with dipole-induced transparency in the weak-coupling regime. *Phys. Rev. A* **2015**, *91*, 032328. [CrossRef]
34. Ren, B.C.; Deng, F.G. Robust hyperparallel photonic quantum entangling gate with cavity QED. *Opt. Express* **2017**, *25*, 10863. [CrossRef] [PubMed]
35. Li, T.; Long, G.L. Hyperparallel optical quantum computation assisted by atomic ensembles embedded in double-sided optical cavities. *Phys. Rev. A* **2016**, *94*, 022343. [CrossRef]
36. Song, X.K.; Ai, Q.; Qiu, J.; Deng, F.G. Physically feasible three-level transitionless quantum driving with multiple Schrodinger dynamics. *Phys. Rev. A* **2016**, *93*, 052324. [CrossRef]
37. Madsen, L.S.; Laudenbach, F.; Askarani, M.F.; Rortais, F.; Vincent, T.; Bulmer, J.F.F.; Miatto, F.M.; Neuhaus, L.; Helt, L.G.; Collins, M.J.; et al. Quantum computational advantage with a programmable photonic processor. *Nature* **2022**, *606*, 75. [CrossRef]
38. Postler, L.; Heussen, S.; Pogorelov, I.; Rispler, M.; Feldker, T.; Meth, M.; Marciniak, C.D.; Stricker, R.; Ringbauer, M.; Blatt, R.; et al. Demonstration of fault-tolerant universal quantum gate operations. *Nature* **2022**, *605*, 675. [CrossRef]
39. Lu, B.; Liu, L.; Song, J.Y.; Wen, K.; Wang, C. Recent progress on coherent computation based on quantum squeezing. *AAPPS Bull.* **2023**, *33*, 7. [CrossRef]
40. Huang, J.; Chen, X.; Li, X.; Wang, J.W. Chip-based photonic graph states. *AAPPS Bull.* **2021**, *33*, 14. [CrossRef]
41. Gottesman, D.;Chuang, I.L. Demonstrating the viability of universal quantum computation using teleportation and single-qubit operations. *Nature* **1999**, *402*, 390. [CrossRef]
42. Huang, Y.F.; Ren, X.F.; Zhang, Y.S.; Duan, L.M.; Guo, G.C. Experimental teleportation of a quantum controlled-not gate. *Phys. Rev. Lett.* **2004**, *93*, 240501. [CrossRef] [PubMed]
43. Daiss, S.; Langenfeld, S.; Welte, S.; Distante, E.; Thomas, P.; Hartung, L.; Morin, O.; Rempe, G. A quantum-logic gate between distant quantum-network modules. *Science* **2021**, *371*, 614. [CrossRef] [PubMed]
44. Kim, Y.; Morvan, A.; Nguyen, L.B.; Naik, R.K.; Jünger, C.; Chen, L.; Kreikebaum, J.M.; Santiago, D.I.; Siddiqi, I. High-fidelity three-qubit iToffoli gate for fixed-frequency superconducting qubits. *Nat. Phys.* **2022**, *18*, 783. [CrossRef]

45. Xu, S.F.; Mao, Y.L.; Feng, L.X.; Chen, H.; Guo, B.X.; Liu, S.; Li, Z.D.; Fan, J.Y. Multiqubit quantum logical gates between distant quantum modules in a network. *Phys. Rev. A* **2023**, *107*, L060601. [CrossRef]
46. Ghosal, P.; Ghosal, A.; Das, D.; Maity, A.G. Quantum superposition of causal structures as a universal resource for local implementation of nonlocal quantum operations. *Phys. Rev. A* **2023**, *107*, 022613. [CrossRef]
47. Huelga, S.F.; Vaccaro, J.A.; Chefles, A.; Plenio, M.B. Quantum remote control: Teleportation of unitary operations. *Phys. Rev. A* **2001**, *63*, 042303. [CrossRef]
48. Huelga, S.F.; Plenio, M.B.; Vaccaro, J.A. Remote control of restricted sets of operations: Teleportation of angles. *Phys. Rev. A* **2002**, *65*, 042316. [CrossRef]
49. Wang, A.M. Remote implementations of partially unknown quantum operations of multiqubits. *Phys. Rev. A* **2006**, *74*, 032317. [CrossRef]
50. Wang, A.M. Combined and controlled remote implementations of partially unknown quantum operations of multiqubits using Greenberger-Horne-Zeilinger states. *Phys. Rev. A* **2007**, *75*, 062323. [CrossRef]
51. Fan, Q.B.; Liu, D.D. Controlled remote implementation of partially unknown quantum operation. *Sci. China Ser. G* **2008**, *51*, 1661. [CrossRef]
52. Qiu, L.; Wang, A.M. Scheme for remote implementation of partially unknown quantum operation of two qubits in cavity QED. *Commun. Theor. Phys.* **2008**, *50*, 1233.
53. Chen, L.B.; Liu, Y.H.; Lu, H. Controlled and remote implementation of a split quantum rotation and sender-encoded secret sharing. *Mod. Phys. Lett. B* **2010**, *24*, 431. [CrossRef]
54. Chen, L.B.; Jin, R.B.; Peng, T.; Lu, H. Realizing open-destination and controlled teleportation of a rotation using partially entangled pairs. *Int. J. Mod. Phys. B* **2011**, *25*, 2853. [CrossRef]
55. Situ, H.; Qiu, D. Investigating the implementation of restricted sets of multiqubit operations on distant qubits: A communication complexity perspective. *Quantum Inf. Process.* **2011**, *10*, 609. [CrossRef]
56. Zhan, Y.B.; Li, X.W.; Ma, P.C.; Shi, J. Controlled remote implementation of quantum operations with high-dimensional systems. *Chin. Phys. B* **2013**, *22*, 040306. [CrossRef]
57. Peng, J.Y.; Bai, M.Q.; Mo, Z.W. Multicharacters remote rotation sharing with five-particle cluster state. *Quantum Inf. Process.* **2019**, *18*, 339. [CrossRef]
58. An, N.B.; Cao, B.T. Controlled remote implementation of operators via hyperentanglement. *J. Phys. A* **2022**, *55*, 225307. [CrossRef]
59. Peng, J.Y.; Tang, L.; Yang, Z.; Lei, H.X.; Bai, M.Q. Many-party controlled remote implementations of multiple partially unknown quantum operations. *Quantum Inf. Process.* **2023**, *22*, 2. [CrossRef]
60. Liu, M.; Maihemuti, N.; Peng, J.Y. Controlled bidirectional remote implementations of partially unknown quantum operations. *Phys. Scr.* **2024**, *99*, 045109. [CrossRef]
61. Shi, W.M.; Bai, M.X.; Zhou, Y.H.; Yang, Y.G. Hierarchical quantum rotation operation sharing with multiparty users. *Quantum Inf. Process.* **2024**, *23*, 196. [CrossRef]
62. Xiang, G.Y.; Li, J.; Guo, G.C. Teleporting a rotation on remote photons. *Phys. Rev. A* **2005**, *71*, 044304. [CrossRef]
63. Muthukrishnan, A.; Stroud, C.R., Jr. Multivalued logic gates for quantum computation. *Phys. Rev. A* **2000**, *65*, 052309. [CrossRef]
64. Bennett, C.H.; DiVincenzo, D.P.; Shor, P.W.; Smolin, J.A.; Terhal, B.M.; Wootters, W.K. Remote state preparation. *Phys. Rev. Lett.* **2001**, *87*, 077902. [CrossRef]
65. Vlasov, A.Y. Noncommutative tori and universal sets of nonbinary quantum gates. *J. Meth. Phys.* **2002**, *65*, 2959. [CrossRef]
66. Zhou, D.L.; Zeng, B.; Xu, Z.; Sun, C.P. Quantum computation based on d-level cluster state. *Phys. Rev. A* **2003**, *68*, 062303. [CrossRef]
67. Wang, C.; Deng, F.G.; Li, Y.S.; Liu, X.S.; Long, G.L. Quantum secure direct communication with high-dimension quantum superdense coding. *Phys. Rev. A* **2005**, *71*, 044305. [CrossRef]
68. Li, X.H.; Deng, F.G.; Zhou, H.Y. Controlled teleportation of an arbitrary multi-qudit state in a general form with d-dimensional Greenberger-Horne-Zeilinger states. *Chin. Phys. Lett.* **2007**, *24*, 1151.
69. Luo, M.X.; Wang, X.J. Universal quantum computation with qudits. *Sci. China-Phys. Mech. Astron.* **2014**, *57*, 1712. [CrossRef]
70. Krenn, M.; Huber, M.; Fickler, R.; Lapkiewicz, R.; Ramelow, S.; Zeilinger, A. Generation and confirmation of a (100×100)-dimensional entangled quantum system. *Proc. Natl. Acad. Sci. USA* **2014**, *111*, 6243. [CrossRef]
71. Kues, M.; Reimer, C.; Roztocki, P.; Cortés, L.R.; Sciara, S.; Wetzel, B.; Zhang, Y.B.; Cino, A.; Chu, S.T.; Little, B.E.; et al. On-chip generation of high-dimensional entangled quantum states and their coherent control. *Nature* **2017**, *7660*, 622. [CrossRef]
72. Bouchard, F.; Fickler, R.; Boyd, R.W.; Karimi, E. High-dimensional quantum cloning and applications to quantum hacking. *Sci. Adv.* **2017**, *3*, e1601915. [CrossRef] [PubMed]
73. Hu, X.M.; Guo, Y.; Liu, B.H.; Huang, Y.F.; Li, C.F.; Guo, G.C. Beating the channel capacity limit for superdense coding with entangled ququarts. *Sci. Adv.* **2018**, *4*, eaat9304. [CrossRef] [PubMed]
74. Reimer, C.; Sciara, S.; Roztocki, P.; Islam, M.; Corts, L.R.; Zhang, Y.B.; Fischer, B.; Loranger, S.; Kashyap, R.; Cino, A.; et al. High-dimensional one-way quantum processing implemented on d-level cluster states. *Nat. Phys.* **2019**, *15*, 148. [CrossRef]
75. Vagniluca, I.; Da Lio, B.; Rusca, D.; Cozzolino, D.; Ding, Y.H.; Zbinden, H.; Zavatta, A.; Oxenl∅we, L.K.; Bacco, D. Efficient time-bin encoding for practical high-dimensional quantum key distribution. *Phys. Rev. Appl.* **2020**, *14*, 014051. [CrossRef]
76. Hu, X.M.; Xing, W.B.; Liu, B.H.; Huang, Y.F.; Li, C.F.; Guo, G.C. Efficient generation of highdimensional entanglement through multipath down-conversion. *Phys. Rev. Lett.* **2020**, *125*, 090503. [CrossRef]

77. Hu, X.M.; Xing, W.B.; Liu, B.H.; He, D.Y.; Cao, H.; Guo, Y.; Zhang, C.; Zhang, H.; Huang, Y.F.; Li, C.F.; et al. Distribution of high-dimensional orbital angular momentum entanglement over a 1 km few-mode fiber. *Optica* **2020**, *7*, 232.
78. Hu, X.M.; Zhang, C.; Liu, B.H.; Cai, Y.; Ye, X.J.; Guo, Y.; Xing, W.B.; Huang, C.X.; Huang, Y.F.; Li, C.F.; et al. Experimental high-dimensional quantum teleportation. *Phys. Rev. Lett.* **2020**, *125*, 230501. [CrossRef]
79. Wang, T.J.; Yang, G.Q.; Wang, C. Control power of high-dimensional controlled teleportation. *Phys. Rev. A* **2020**, *101*, 012323. [CrossRef]
80. Kiktenko, E.O.; Nikolaeva, A.S.; Xu, P.; Shlyapnikov, G.V.; Fedorov, A.K. Scalable quantum computing with qudits on a graph. *Phys. Rev. A* **2020**, *101*, 022304. [CrossRef]
81. Saha, A.; Majumdar, R.; Saha, D.; Chakrabarti, A.; Sur-Kolay, S. Asymptotically improved circuit for a d-ary Grover's algorithm with advanced decomposition of the n-qudit Toffoli gate. *Phys. Rev. A* **2022**, *105*, 062453. [CrossRef]
82. Nikolaeva, A.S.; Kiktenko, E.O.; Fedorov, A.K. Decomposing the generalized Toffoli gate with qutrits. *Phys. Rev. A* **2022**, *105*, 032621. [CrossRef]
83. Chen, X.; Shen, Y.; Zhang, F.L. Perfect teleportation with a partially entangled quantum channel. *Phys. Rev. A* **2022**, *106*, 032430. [CrossRef]
84. Hrmo, P.; Wilhelm, B.; Gerster, L.; van Mourik, M.W.; Huber, M.; Blatt, R.; Schindler, P.; Monz, T.; Ringbauer, M. Native qudit entanglement in a trapped ion quantum processor. *Nat. Commun.* **2023**, *14*, 2242. [CrossRef]
85. Luo, K.; Huang, W.H.; Tao, Z.Y.; Zhang, L.B.; Zhou, Y.X.; Chu, J.; Liu, W.X.; Wang, B.Y.; Cui, J.Y.; Liu, S.; et al. Experimental realization of two qutrits gate with tunable coupling in superconducting circuits. *Phys. Rev. Lett.* **2023**, *130*, 030603. [CrossRef]
86. Xing, W.B.; Hu, X.M.; Guo, Y.; Liu, B.H.; Li, C.F.; Guo, G.C. Preparation of multiphoton high-dimensional GHZ states. *Opt. Express* **2023**, *31*, 24887. [CrossRef] [PubMed]
87. Lv, M.Y.; Hu, X.M.; Gong, N.F.; Wang, T.J.; Guo, Y.; Liu, B.H.; Huang, Y.F.; Li, C.F.; Guo, G.C. Demonstration of controlled high-dimensional quantum teleportation. *Sci. China-Phys. Mech. Astron.* **2024**, *67*, 230311. [CrossRef]
88. Xu, Q.; Zhou, L.X.; Feng, T.F.; Qiu, S.F.; Li, S.W.; Zhang, W.J.; Luo, H.; Zhou, X.Q. Experimental quantum state compression from two identical qubits to a qutrit. *Sci. China-Phys. Mech. Astron.* **2024**, *67*, 270311. [CrossRef]
89. Jin, R.H.; Wei, W.S.; Zhou, P. Hierarchical controlled remote preparation of an arbitrary m-qudit state with four-qudit cluster states. *Quantum Inf. Process.* **2023**, *22*, 113. [CrossRef]
90. Wang, Y.C.; Hu, Z.X.; Sanders, B.C.; Kais, S. Qudits and high-dimensional quantum computing. *Front. Phys.* **2020**, *8*, 589504. [CrossRef]

Disclaimer/Publisher's Note: The statements, opinions and data contained in all publications are solely those of the individual author(s) and contributor(s) and not of MDPI and/or the editor(s). MDPI and/or the editor(s) disclaim responsibility for any injury to people or property resulting from any ideas, methods, instructions or products referred to in the content.